# City of Gig Harbor
# Stormwater Management and Site Development Manual

## Volume V
## Runoff Treatment BMPs

Prepared by:
Pierce County Surface Water Management

Modified by:
City of Gig Harbor Public Works Department

*printed on recycled paper*

# Table of Contents

**Chapter 1 - Introduction ..... 1-1**

1.1 Purpose of This Volume ..... 1-1
1.2 Content and Organization of This Volume ..... 1-1
1.3 How to Use This Volume ..... 1-1
1.4 Runoff Treatment Facilities ..... 1-2
1.4.1 General Considerations ..... 1-2
1.4.2 Maintenance ..... 1-2
1.4.3 Treatment Methods ..... 1-2

**Chapter 2 - Treatment Facility Selection Process ..... 2-1**

2.1 Step-by-Step Selection Process for Treatment Facilities ..... 2-1
Step 1: Determine the Receiving Waters and Pollutants of Concern Based on Off-Site Analysis ..... 2-1
Step 2: Determine Whether the Facility Will Be City-Owned or Privately Owned ..... 2-3
Step 3: Determine Whether an Oil Control Facility/Device is Required ..... 2-4
Step 4: Determine Whether Infiltration for Pollutant Removal is Practicable ..... 2-5
Step 5: Determine Whether Control of Phosphorous is Required ..... 2-6
Step 6: Determine Whether Enhanced Treatment is Required ..... 2-7
Step 7: Select a Basic Treatment Facility ..... 2-8
2.2 Other Treatment Facility Selection Factors ..... 2-9

**Chapter 3 - Treatment Facility Menus ..... 3-1**

3.1 Guide to Applying Menus ..... 3-1
3.2 Oil Control Menu ..... 3-2
3.3 Phosphorus Treatment Menu ..... 3-3
3.4 Enhanced Treatment Menu ..... 3-5
3.5 Basic Treatment Menu ..... 3-7

**Chapter 4 - General Requirements for Stormwater Treatment Facilities ..... 4-1**

4.1 Design Volume and Flow ..... 4-1
4.1.1 Water Quality Design Storm Volume ..... 4-1
4.1.2 Water Quality Design Flow Rate ..... 4-1
4.1.3 Flows Requiring Treatment ..... 4-2
4.2 Sequence of Facilities ..... 4-3
4.3 Facility Liners ..... 4-4
4.3.1 General Design Criteria ..... 4-5
4.3.2 Design Criteria for Treatment Liners ..... 4-7

4.3.3 Design Criteria for Low Permeability Liner Options ..... 4-7
4.4 Maintenance Standards for Drainage Facilities ..... 4-10

**Chapter 5 - Pretreatment ..... 5-1**

5.1 Purpose ..... 5-1
5.2 Application ..... 5-1
5.3 Best Management Practices for Pretreatment ..... 5-1
BMP T5.10 Presettling Basin ..... 5-2

**Chapter 6 - Infiltration and Bioinfiltration Treatment Facilities ..... 6-1**

6.1 Purpose ..... 6-1
6.2 Application ..... 6-1
6.3 General Considerations ..... 6-2
6.4 Soil Requirements for Infiltration for Water Quality Treatment ..... 6-2
6.5 Best Management Practices for Infiltration and Bioinfiltration Treatment ..... 6-3
BMP T6.10 Infiltration Basins ..... 6-3
BMP T6.20 Infiltration Trenches ..... 6-3
BMP T6.30 Bioinfiltration Swale ..... 6-4
BMP T6.40 Bioretention ..... 6-5

**Chapter 7 - Sand Filtration Treatment Facilities ..... 7-1**

7.1 Purpose ..... 7-1
7.2 Description ..... 7-1
7.3 Performance Objectives ..... 7-1
7.4 Applications and Limitations ..... 7-11
7.5 Site Suitability ..... 7-11
7.6 Design Requirements ..... 7-12
7.6.1 Sand Filter Sizing Procedure ..... 7-12
7.7 Construction Criteria ..... 7-14
7.8 Best Management Practices ..... 7-15
BMP T7.10 Sand Filter Basin ..... 7-15
BMP T7.20 Sand Filter Vault ..... 7-19
BMP T7.30 Linear Sand Filter ..... 7-21

**Chapter 8 - Biofiltration Treatment Facilities ..... 8-1**

8.1 Purpose ..... 8-1
8.2 Applications ..... 8-1
8.3 Site Suitability ..... 8-1
8.4 Best Management Practices ..... 8-2
BMP T8.10 Basic Biofiltration Swale ..... 8-3

BMP T8.20 Wet Biofiltration Swale ..... 8-23
BMP T8.30 Continuous Inflow Biofiltration Swale ..... 8-26
BMP T8.40 Basic Filter Strip ..... 8-27
BMP T8.50 Narrow Area Filter Strip ..... 8-30

**Chapter 9 - Wet Pool Facilities ..... 9-1**

9.1 Purpose ..... 9-1
9.2 Application ..... 9-1
9.3 Best Management Practices for Wet Pool Facilities ..... 9-1
BMP T9.10 Wet Ponds – Basic and Large ..... 9-2
BMP T9.20 Wet Vaults ..... 9-12
BMP T9.30 Stormwater Treatment Wetlands ..... 9-19
BMP T9.40 Combined Detention and Wet Pool Facilities ..... 9-25

**Chapter 10 - Oil and Water Separators ..... 10-1**

10.1 Purpose of Oil and Water Separators ..... 10-1
10.2 Description ..... 10-1
10.3 Performance Objectives ..... 10-1
10.3 Site Suitability ..... 10-5
10.4 Design Criteria-General Considerations ..... 10-5
10.4.1 Criteria for Separator Bays ..... 10-6
10.4.2 Criteria for Baffles ..... 10-6
10.5 Oil and Water Separator BMPs ..... 10-6
BMP T10.10 API (Baffle type) Separator Bay ..... 10-7
BMP T10.11 Coalescing Plate (CP) Separator Bay ..... 10-9

**Chapter 11 - Emerging Technologies ..... 11-1**

11.1 Background ..... 11-1
11.2 Evaluation of Emerging Technologies ..... 11-1
11.3 Applicability and Restrictions ..... 11-2

**Volume V References and Information Sources ..... Ref-1**

**Appendix V-A – Geotextile Specifications ..... A-1**

# Tables


Table 3.1. Treatment Trains for Phosphorus Removal. ..... 3-5
Table 3.2. Treatment Trains for Dissolved Metals Removal. ..... 3-7
Table 4.1. Treatment Facility Placement in Relation to Detention. ..... 4-5
Table 4.2. Lining Types Required for Runoff Treatment Facilities. ..... 4-6
Table 4.3. Compacted Till Liners. ..... 4-8
Table 7.1. Sand Filter Design Parameters. ..... 7-13
Table 7.2. Sand Filter Design and Sizing Criteria. ..... 7-14
Table 7.3. Sand Medium Specification. ..... 7-17
Table 7.4. Clay Liner Specifications. ..... 7-18
Table 8.1. Sizing Criteria. ..... 8-4
Table 8.2. Guide for Selecting Degree of Retardance. [(a)] ..... 8-13
Table 8.3. Grass Seed Mixes Suitable for Biofiltration Swale Treatment Areas ..... 8-20
Table 8.4. Groundcovers and Grasses Suitable for the Upper Side Slopes of a Biofiltration Swale in Western Washington. ..... 8-20
Table 8.5. Recommended Plants for Wet Biofiltration Swale. ..... 8-25
Table 9.1. Emergent Wetland Plant Species Recommended for Wet Ponds. ..... 9-10
Table 9.2. Distribution of Depths in Wetland Cell. ..... 9-21
Table A.1. Geotextile Properties for Underground Drainage Geotextile Property Requirements.[1] ..... A-1
Table A.2. Geotextile for Underground Drainage Filtration Properties Geotextile Property Requirements.[1] ..... A-1
Table A.3. Geotextile Strength Properties for Impermeable Liner Protection. ..... A-2

# Figures


Figure 2.1. Treatment Facility Selection Flow Chart. 2-2
Figure 7.1a. Sand Filter Basin with Pretreatment Cell. 7-2
Figure 7.1b. Sand Filter Basin with Pretreatment Cell (cont). 7-3
Figure 7.2a. Sand Filter Basin with Level Spreader. 7-4
Figure 7.2b. Sand Filter Basin with Level Spreader (cont). 7-5
Figure 7.3a. Flow Splitter Option A. 7-6
Figure 7.3b. Flow Splitter Option B. 7-7
Figure 7.4a. Sand Filter Vault. 7-8
Figure 7.4b. Sand Filter Vault (cont). 7-9
Figure 7.5. Linear Sand Filter. 7-10
Figure 8.1. Biofiltration Swale Underdrain Detail. 8-5
Figure 8.2. Biofiltration Swale Low-Flow Drain Detail. 8-5
Figure 8.3. Swale Dividing Berm. 8-6
Figure 8.4. Geometric Formulas for Common Swale Shapes. 8-10
Figure 8.5a. Ratio of SBUH Peak/Water Quality Flow. 8-11
Figure 8.5b. Ratio of SBUH Peak/Water Quality Flow. 8-11
Figure 8.6. The Relationship of Manning's n with VR for Various Degrees of Flow Retardance (A-E). 8-14
Figure 8.7. Biofiltration Swale Access Features. 8-22
Figure 8.8. Typical Filter Strip. 8-29
Figure 8.9. Filter Strip Lengths for Narrow Right-of-Way. 8-31
Figure 9.1. Wet Vault Geometry. 9-13
Figure 9.2. Stormwater Wetland – Option One. 9-23
Figure 9.3. Stormwater Wetland – Option Two. 9-24
Figure 9.4a. Combined Detention and Wet Pond. 9-27
Figure 9.4b. Combined Detention and Wet Pond (cont). 9-28
Figure 9.5. Alternative Configurations of Detention and Wet Pool Areas. 9-29
Figure 10.1. API (Baffle Type) Separator. 10-2
Figure 10.2. Coalescing Plate Separator. 10-3
Figure 10.3. Spill Control Separator (not for oil treatment). 10-4

# Chapter 1 - Introduction

## 1.1 Purpose of This Volume

This volume of the stormwater manual focuses on best management practices (BMPs) for the treatment of runoff to remove sediment and other pollutants at developed sites. These BMPs are required to ensure that development or redevelopment do not impair waters of the state. These controls are also to protect wetlands, riparian corridors, and groundwaters to the maximum extent practicable.

The purpose of this volume is to provide guidance for selection, design and maintenance of permanent runoff treatment facilities.

BMPs with respect to controlling stormwater flows and control of pollutant sources are presented in Volumes III and IV, respectively.

## 1.2 Content and Organization of This Volume

Volume V of the stormwater manual contains 11 chapters:

- Chapter 1 serves as an introduction and summarizes available options for treatment of stormwater.
- Chapter 2 outlines a step-by-step process for selecting treatment facilities for new development and redevelopment projects.
- Chapter 3 presents treatment facility "menus" that are used in applying the step-by-step process presented in Chapter 2. These menus cover different treatment needs that are associated with different sites.
- Chapter 4 discusses general requirements for treatment facilities.
- Chapters 5 through 10 provide detailed information regarding specific types of treatment identified in the menus.
- Chapter 11 discusses special considerations for emerging technologies for stormwater treatment.

The appendices to this volume contain more detailed information on selected topics described in the various chapters.

## 1.3 How to Use This Volume

This volume should be consulted to select specific BMPs for runoff treatment for inclusion in stormwater site plans (see Volume I). After the minimum requirements have been identified from Volume I, this volume

can be used to select specific treatment facilities for permanent use at developed sites, and as an aid in designing and constructing these facilities.

## 1.4 Runoff Treatment Facilities

### 1.4.1 General Considerations

Runoff treatment facilities are designed to remove pollutants contained in stormwater runoff. The pollutants of concern include sand, silt, and other suspended solids; metals such as copper, lead, and zinc; nutrients (e.g., nitrogen and phosphorous); certain bacteria and viruses; and organics such as petroleum hydrocarbons and pesticides. Methods of pollutant removal include sedimentation/settling, filtration, plant uptake, ion exchange, adsorption, and bacterial decomposition. Floatable pollutants such as oil, debris, and scum can be removed with separator structures.

### 1.4.2 Maintenance

Maintenance is required for all types of runoff treatment facilities. See Volume I, Minimum Requirement #10, and Appendix I-B for additional information on maintenance requirements.

### 1.4.3 Treatment Methods

Methods used for runoff treatment facilities and common terms used in runoff treatment are discussed below:

- **Wet pools.** Wet pools provide runoff treatment by allowing settling of particulates during quiescent conditions (sedimentation), by biological uptake, and by vegetative filtration. Wet pool facilities include wet ponds, wet vaults, and constructed stormwater wetlands. Wet pools may be single-purpose facilities, providing only runoff treatment, or they may be combined with a detention pond or vault to also provide flow control. If combined, the wet pool facility can often be stacked under the detention facility with little further loss of development area.

- **Biofiltration.** Biofiltration uses vegetation in conjunction with slow and shallow-depth flow for runoff treatment. As runoff passes through the vegetation, pollutants are removed through the combined effects of filtration, infiltration, and settling. These effects are aided by the reduction of the velocity of stormwater as it passes through the biofilter. Biofiltration facilities include swales that are designed to convey and treat concentrated runoff at shallow depths and slow velocities, and filter strips that are broad areas of vegetation for treating sheet flow runoff.

- **Oil/Water Separation.** Oil/water separators remove oil floating on the top of the water. There are two general types of separators - the American Petroleum Institute (API) separators and coalescing plate (CP) separators. Both use gravity to remove floating and dispersed oil. API separators, or baffle separators, are generally composed of three chambers separated by baffles. The efficiency of these separators is dependent on detention time in the center, or detention chamber, and on droplet size. CP separators use a series of parallel plates, which improve separation efficiency by providing more surface area, thus reducing the space needed for the separator. Oil/water separators must be located off-line from the primary conveyance/detention system, bypassing flows greater than the water quality design flow. Other devices/facilities that may be used for removal of oil include linear sand filters. Oil control devices/facilities should always be placed upstream of other treatment facilities and as close to the source of oil generation as possible. **Note that Gig Harbor will not accept ownership of some types of oil control facilities without prior approval.** See Chapter 3 for additional information.

- **Pretreatment.** Presettling basins are often used to remove sediment from runoff prior to discharge into other treatment facilities. Basic treatment facilities, listed in Step 7 – Figure 2.1, can also be used to provide pretreatment. Pretreatment often must be provided for filtration and infiltration facilities to protect them from clogging or to protect groundwater. Appropriate pretreatment devices include a presettling basin, wet pond/vault, biofilter, constructed wetland, or oil/water separator.

- **Infiltration.** Infiltration refers to the use of the filtration, adsorption, and biological decomposition properties of soils to remove pollutants. Infiltration can provide multiple benefits including pollutant removal, peak flow control, groundwater recharge, and flood control. However, one condition that can limit the use of infiltration is the potential adverse impact on groundwater quality. To adequately address the protection of groundwater when evaluating infiltration it is important to understand the difference between soils that are suitable for runoff treatment and soils only suitable for flow control. **Infiltration facilities should not be used for combined treatment/flow control purposes in Gig Harbor**. To be used for runoff treatment, soils must include sufficient organic content and sorption capacity to remove pollutants. Examples are silty and sandy loams. Coarser soils, such as gravelly sands, can provide flow control but are not suitable for providing runoff treatment. The use of coarser soils to provide flow control for runoff from pollution generating surfaces must be preceded by treatment to

protect groundwater quality. Thus, there will be instances when soils are suitable for treatment but not flow control, and vice versa. In addition, note that infiltration is regulated by the Washington State Department of Ecology (Ecology) and the Underground Injection Control (UIC) Program (Washington Administrative Code [WAC] 173-218). Additional information on UIC and how it applies to infiltration and stormwater management is included in Volume III, Section 3.4.

- **Filtration.** A relatively new application of a pollutant removal system for stormwater is the use of various media such as sand, perlite, zeolite, and carbon, to remove low levels of total suspended solids. Specific media such as activated carbon or zeolite can remove hydrocarbons and soluble metals. Filter systems are commonly configured as basins, trenches, vaults, or proprietary cartridge filtration systems. **Note that Gig Harbor will not accept ownership of media filtration facilities without prior approval.**

- **"Emerging Technologies."** Emerging technologies are new technologies that have not been evaluated using approved protocols, but for which preliminary data indicate that they may provide a desirable level of stormwater pollutant removal. They have not been evaluated in sufficient detail to be acceptable as standalone BMPs for general usage in new development or redevelopment situations requiring basic treatment. As such, their use is restricted in accordance with their level of development as explained in Chapter 11. The recommendations for use of these emerging technologies will change as we collect more data on their performance. Updated recommendations on their use will be posted to the Ecology Web site. Meanwhile, emerging technologies can also be used for retrofit situations.

- **"On-line" Systems.** Most treatment facilities can be designed as "on-line" systems with flows above the water quality design flow or volume simply passing through the facility with lesser or no pollutant removal efficiency. However, it is sometimes desirable to restrict flows to treatment facilities and bypass the remaining higher flows around them. These are called "off-line" systems. An example of an on-line system is a wet pool that maintains a permanent pool of water for runoff treatment purposes.

- **Design Flow.** For information on determining the design storm and flows for sizing treatment facilities refer to Chapter 4.

# Chapter 2 - Treatment Facility Selection Process

This chapter describes a step-by-step process for selecting the type of treatment facilities that will apply to individual projects. Physical features of sites that are applicable to treatment facility selection are also discussed. Refer to Chapter 3 for additional detail on the four treatment menus – oil control treatment, phosphorous treatment, enhanced treatment, and basic treatment.

While this chapter provides guidance to the applicant or project engineer regarding the selection of treatment facilities, facility selection remains the responsibility of the project engineer.

## 2.1 Step-by-Step Selection Process for Treatment Facilities

Please refer to Figure 2.1. Use the step-by-step process outlined below to determine the type of treatment facilities applicable to the project.

### Step 1: Determine the Receiving Waters and Pollutants of Concern Based on Off-Site Analysis

An off-site analysis is recommended in order to obtain a more complete determination of the potential impacts of a stormwater discharge. Without an off-site analysis, the project applicant still must determine the natural receiving water for the stormwater drainage from the project site (groundwater, wetland, lake, stream, or salt water). This is necessary to determine the applicable treatment menu from which to select treatment facilities. The identification of the receiving water should be verified by Gig Harbor. If the discharge is to the municipal stormwater drainage system, the receiving water for the drainage system must be determined.

The following factors must be considered when determining the appropriateness of a treatment facility:

- Whether the receiving water is reported under Section 305(b) of the Clean Water Act (CWA), and designated as not supporting beneficial uses;
- Whether the receiving water is listed under Sections 304(1)(1)(A)(I), 304(1)(1)(A)(II), or 304(1)(1)(B)(1) of the CWA;
- Whether the receiving water is listed in Washington State's Non-point Source Assessment required by Section 319(a) of the CWA;

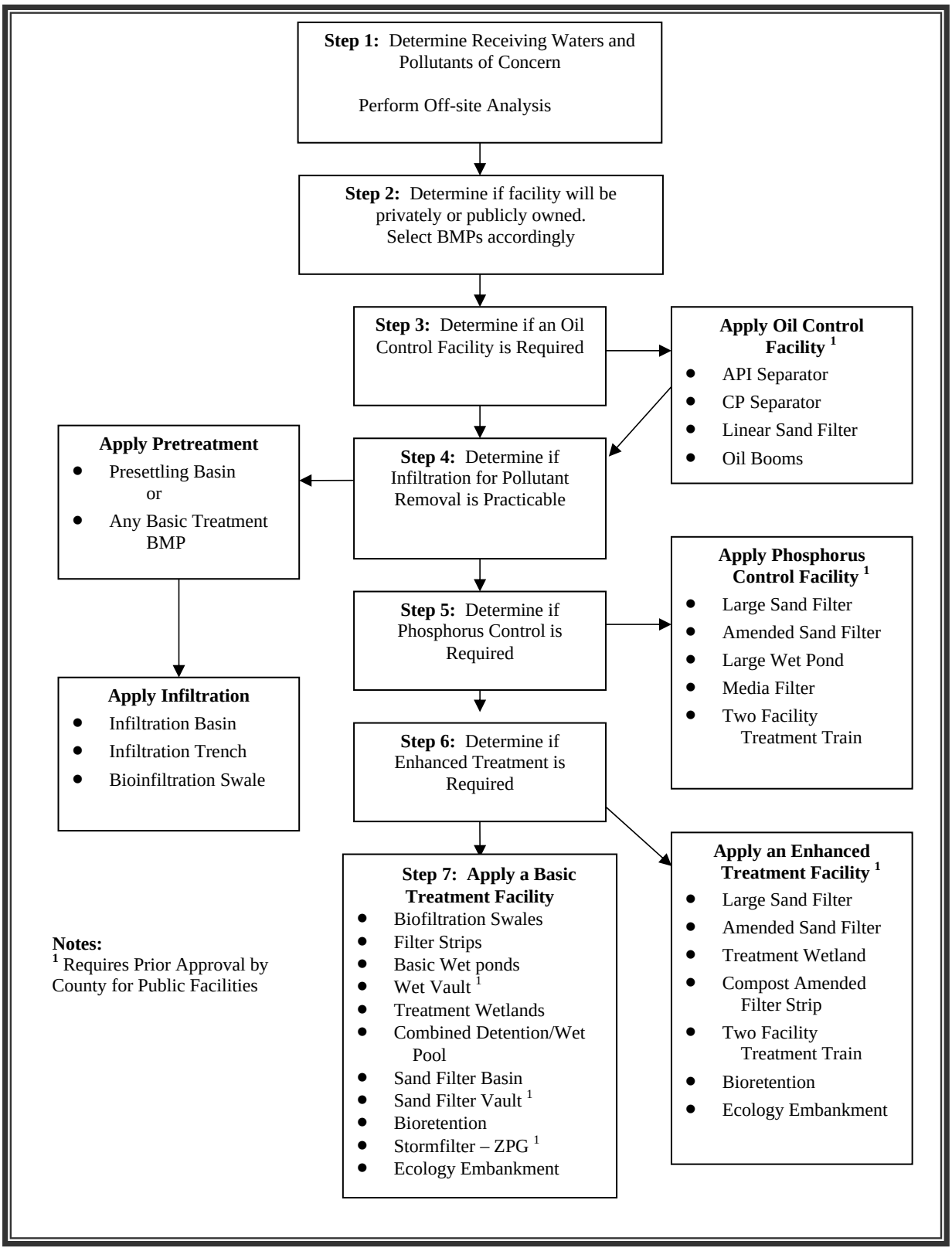


**Figure 2.1. Treatment Facility Selection Flow Chart.**

Determine whether any type of water quality management plans and/or local ordinances or regulations have established specific requirements for that (those) receiving waters. These requirements should be verified by Gig Harbor. Examples of plans to be aware of include:

- Watershed or Basin Plans: These can be developed to cover a wide variety of geographic scales (e.g., Water Resource Inventory Areas [WRIAs], or subbasins of a few square miles), and can be focused solely on establishing stormwater requirements (e.g., "Stormwater Basin Plans"), or can address a number of pollution and water quantity issues, including urban stormwater (e.g., Puget Sound Non-Point Action Plans).

- Water Cleanup Plans: These plans are written to establish a total maximum daily load of a pollutant or pollutants in a specific receiving water or basin, and to identify actions necessary to remain below that maximum loading. The plans may identify discharge limitations or management limitations (e.g., use of specific treatment facilities) for stormwater discharges from new and redevelopment projects.

- Groundwater Management Plans (Wellhead Protection Plans): To protect groundwater quality and/or quantity, these plans may identify actions required of stormwater discharges.

- Lake Management Plans: These plans are developed to protect lakes from eutrophication due to inputs of phosphorus from the drainage basin. Control of phosphorus from new development is a likely requirement in any such plans.

An analysis of the proposed land use(s) of the project should also be used to determine the stormwater pollutants of concern. This analysis will help determine whether "basic," "enhanced," or "phosphorus" treatment requirements apply to the project. Those decisions are made in the steps below.

### Step 2: Determine Whether the Facility Will Be City Owned or Privately Owned

Gig Harbor will not accept ownership of some types of water quality BMPs without prior approval by the city. As outlined in Figure 2.1, BMPs that require prior approval include:

- Any oil control, phosphorus control, or enhanced treatment facility
- Wet vaults
- Sand Filter Vaults
- Media Filtration devices.

If ownership of the facility is to be taken over by the city, and any of the above facilities are required or proposed, the designer must obtain approval from the city before including those facilities in the stormwater design.

### Step 3: Determine Whether an Oil Control Facility/Device is Required

The use of oil control devices and facilities is dependent upon the specific land use proposed for development.

The oil control menu (Section 3.2) applies to projects that have "high-use sites" or have National Pollutant Discharge Elimination System (NPDES) permits that require application of oil control. High-use sites are those that typically generate high concentrations of oil due to high traffic turnover or the frequent transfer of oil. High-use sites include:

- An area of a commercial or industrial site subject to an expected design year average daily traffic count equal to or greater than 100 vehicles per 1,000 square feet of gross building area

- An area of a commercial or industrial site subject to petroleum storage and transfer in excess of 1,500 gallons per year, not including routinely delivered heating oil

- An area of a commercial or industrial site subject to parking, storage or maintenance of 25 or more vehicles that are over 10 tons gross weight (trucks, buses, trains, heavy equipment, etc.)

- A road intersection with a design year average daily traffic count of 25,000 vehicles or more on the main roadway and 15,000 vehicles or more on any intersecting roadway, excluding projects proposing primarily pedestrian or bicycle use improvements.

Note: The design year average daily traffic is defined as the planned traffic 5 years after the road is scheduled to be built. The traffic count can be estimated using information from "Trip Generation," published by the Institute of Transportation Engineers, or from a traffic study prepared by a professional engineer or transportation specialist with experience in traffic estimation.

The city may also require oil control facilities from this menu to be used on other sites that generate high concentrations of oil.

If oil control is required for the site, please refer to the General Requirements in Chapter 4. These requirements may affect the design and placement of facilities on the site (e.g., flow splitting). Please refer to the

oil control menu for a listing of oil control facility options. Then see Chapter 10 for guidance on the proper selection of options and design details.

***If an Oil Control Facility is required, select and apply an Oil Control Facility. Please refer to the oil control menu in Section 3.2. After selecting an oil control facility, proceed to Step 4.***

***If an oil control facility is not required, proceed directly to Step 4.***

### Step 4: Determine Whether Infiltration for Pollutant Removal is Practicable

**Infiltration facilities should not be used for combined treatment/flow control purposes in Gig Harbor**. Please check the infiltration treatment design criteria in Chapter 6. Infiltration can be effective at treating stormwater runoff, but soil properties must be appropriate to achieve effective treatment while not adversely impacting groundwater resources. The location and depth to bedrock, the water table, or impermeable layers (such as glacial till), and the proximity to wells, foundations, septic tank drainfields, and unstable slopes can preclude the use of infiltration. Infiltration treatment facilities must be preceded by a pretreatment facility, such as a presettling basin or vault, to reduce the occurrence of plugging. Any of the basic treatment facilities, and detention ponds designed to meet flow control requirements, can also be used for pretreatment. If an oil/water separator is necessary for oil control, it can also function as the presettling basin as long as the influent suspended solids concentrations are not high. However, frequent inspections are necessary to determine when accumulated solids exceed the 6-inch depth at which clean-out is recommended.

If infiltration is planned, please refer to the General Requirements in Chapters 4 and 6. They can affect the design and placement of facilities on your site. For non-residential developments, if your infiltration site is within one-fourth mile of a fish-bearing stream, a tributary to a fish-bearing stream, or a lake, please refer to Step 6 below to determine if part or the entire site are subject to the enhanced treatment menu (Section 3.4). If the enhanced treatment menu does apply, read the Note under "Infiltration with appropriate pretreatment" to identify special pretreatment needs. If your infiltration site is within one-fourth mile of a phosphorus-sensitive receiving water, please refer to the phosphorus treatment menu (Section 3.3) for special pretreatment needs.

Note: Infiltration for flow control outlined in Volume III, Chapter 3 is allowable. However, the infiltration facility must be preceded by at least a basic treatment facility. Following a basic treatment facility (or an enhanced treatment or a phosphorus treatment facility in accordance with the previous paragraph), infiltration through the bottom of a

detention/retention facility for flow control can also be acceptable as a way to reduce direct discharge volumes to streams and the size of the facility.

***If infiltration is practicable, select and apply pretreatment and an infiltration facility.***

***If infiltration is not practicable, proceed to Step 5.***

### Step 5: Determine Whether Control of Phosphorous is Required

Please refer to the plans, ordinances, and regulations identified in Step 1 as sources of information.

The requirement to provide phosphorous control is determined by Gig Harbor, Ecology, or the USEPA. At the time this volume was developed, there were no established phosphorus control requirements in Gig Harbor. In the future, the city may develop a management plan and implementing ordinances or regulations for control of phosphorus from new development and redevelopment for the receiving water(s) of the stormwater drainage. The city may use the following sources of information for pursuing plans and implementing ordinances and/or regulations:

- Those water bodies reported under Section 305(b) of the CWA, and designated as not supporting beneficial uses due to phosphorous;
- Those listed in Washington State's Nonpoint Source Assessment required under Section 319(a) of the CWA due to nutrients.

If phosphorus control is required, select and apply a phosphorous treatment facility. Please refer to the phosphorus treatment menu in Section 3.3. Select an option from the menu after reviewing the applicability and limitations, site suitability, and design criteria of each for compatibility with the site.

If you have selected a phosphorus treatment facility, please refer to the General Requirements in Chapter 4. They may affect the design and placement of the facility on the site.

Note: Project sites subject to the phosphorus treatment requirement could also be subject to the enhanced treatment requirement (see Step 6). In that event, apply a facility or a treatment train that is listed in both the enhanced treatment menu and the phosphorus treatment menu.

***If phosphorus treatment is not required for the site, proceed to Step 6.***

### Step 6: Determine Whether Enhanced Treatment is Required

Enhanced treatment is required for the following project sites that discharge to fish-bearing streams, lakes, or to waters or conveyance systems tributary to fish-bearing streams or lakes:

- Industrial project sites
- Commercial project sites
- Multifamily project sites with 200 units or greater
- High design year average daily traffic roads as follows:
    - Within urban growth management areas:
        - Fully controlled and partially controlled limited access highways with design year average daily traffic counts of 15,000 or more
        - All other roads with an design year average daily traffic of 7,500 or greater
    - Outside of urban growth management areas:
        - Roads with an design year average daily traffic of 15,000 or greater unless discharging to a 4th Strahler order stream or larger
        - Roads with an design year average daily traffic of 30,000 or greater if discharging to a 4th Strahler order stream or larger (as determined using 1:24,000 scale maps to delineate stream order)
    - The design year average daily traffic is defined as the planned traffic 5 years after the road is scheduled to be built.

However, such sites listed above that discharge directly (or, indirectly through a municipal storm sewer system) to basic treatment receiving waters (see below), and areas of the above-listed project sites that are identified as subject to basic treatment requirements (see Step 7) are also not subject to enhanced treatment requirements. For developments with a mix of land use types, the enhanced treatment requirement shall apply when the runoff from the areas subject to the enhanced treatment requirement comprises 50 percent or more of the total runoff within a threshold discharge area.

Basic treatment receiving waters currently include:

- All salt waters
- Puyallup River (downstream of Carbon River)
- Nisqually River (downstream of Alder Lake)
- White River (downstream of Greenwater River).

**If the project must apply enhanced treatment, select and apply an appropriate enhanced treatment facility.** Please refer to the enhanced treatment menu in Section 3.4. Select an option from the menu after reviewing the applicability and limitations, site suitability, and design criteria of each for compatibility with the site.

Note: Project sites subject to the enhanced treatment requirement could also be subject to a phosphorus removal requirement if located in an area designated for phosphorus control. In that event, apply a facility or a treatment train that is listed in both the enhanced treatment menu and the phosphorus treatment menu. If you have selected an enhanced treatment facility, please refer to the General Requirements in Chapter 4. They may affect the design and placement of the facility on the site.

***If enhanced treatment does not apply to the site, please proceed to Step 7.***

### Step 7: Select a Basic Treatment Facility

The basic treatment menu is generally applied to:

- Project sites that discharge to the ground, UNLESS:
    - The soil suitability criteria for infiltration treatment are met (see Chapter 6), or
    - The project uses infiltration strictly for flow control – not treatment – and the discharge is within one-fourth mile of a phosphorus sensitive lake (use the phosphorus treatment menu), or within one-fourth mile of a fish-bearing stream, or a lake (use the enhanced treatment menu).
- Residential projects not otherwise needing phosphorus control in Step 5 as designated by USEPA, Ecology, or Gig Harbor;
- Project sites discharging directly to basic treatment receiving waters (listed under Step 6);
- Project sites that drain to streams that are not fish-bearing, or to waters not tributary to fish-bearing streams;

- Landscaped areas of industrial, commercial, and multifamily project sites; and parking lots of industrial and commercial project sites, dedicated solely to parking of employees' private vehicles that do not involve any other pollution-generating sources (e.g., industrial activities, customer parking, storage of erodible or leachable material, wastes or chemicals).

For developments with a mix of land use types, the basic treatment requirement shall apply when the runoff from the areas subject to the basic treatment requirement comprises 50 percent or more of the total runoff within a threshold discharge area.

Please refer to the basic treatment menu in Section 3.5. Select an option from the menu after reviewing the applicability and limitations, site suitability, and design criteria of each for compatibility with the site.

After selecting a basic treatment facility, please refer to the General Requirements in Chapter 4. They may affect the design and placement of the facility on the site.

***You have completed the treatment facility selection process.***

## 2.2 Other Treatment Facility Selection Factors

The selection of a treatment facility should be based on site physical factors and pollutants of concern. The requirements for use of enhanced treatment or phosphorus treatment represent facility selection based on pollutants of concern. Even if the site is not subject to those requirements, try to choose a facility that is more likely to do a better job removing the types of pollutants generated on the site. Integration of treatment facilities with flow control and spill containment measures should also be considered (note: infiltration should not be used to provide treatment and flow control in a combined facility). The types of site physical factors that influence facility selection are briefly summarized below.

### *Pollutants of Concern*

Various land uses can be more or less likely to generate specific pollutant types. For example, oil and grease are the expected pollutants from an uncovered fueling station. In this example, a combination of an oil/water separator and a biofilter could be considered as the basic treatment for runoff from uncovered fueling stations.

### *Soil Type*

The permeability of the soil underlying a treatment facility has a profound influence on its effectiveness. This is particularly true for infiltration treatment facilities (see Chapter 6). Likewise, wet pond facilities situated

on coarser soils will need a synthetic liner or the soils amended to reduce the infiltration rate and provide treatment. Maintaining a permanent pool in the first cell is necessary to avoid resuspension of settled solids. Biofiltration swales in coarse soils can also be amended to reduce the infiltration rate.

### *High Sediment Input*

High total suspended solids loads can clog infiltration soil, sand filters, and coalescing plate oil and water separators. Pretreatment with a presettling basin, wet vault, or another basic treatment facility is typically required.

### *Other Physical Factors*

*Slope and Topography:* Steep slopes restrict the use of several BMPs. For example, biofiltration swales are usually situated on sites with slopes of less than 6 percent, although greater slopes can be considered. Infiltration BMPs are not suitable when the slope exceeds 15 percent.

*High Water Table:* Unless there is sufficient horizontal hydraulic receptor capacity the water table acts as an effective barrier to exfiltration and can sharply reduce the efficiency of an infiltration system. If the high water table extends to within 5 feet of the bottom of an infiltration BMP, the site is not suitable.

*Depth to Bedrock/ Hardpan/Till:* The downward exfiltration of stormwater is also impeded if a bedrock or till layer lies too close to the surface. If the impervious layer lies within 5 feet below the bottom of the infiltration BMP, the site is not suitable. Similarly, pond BMPs are often not feasible if bedrock lies within the area that must be excavated.

*Proximity to Foundations and Wells:* Since infiltration BMPs convey runoff back into the soil, some sites may experience problems with local seepage. This can be a problem if the BMP is located too close to a building foundation. Another risk is groundwater pollution; hence the requirement to site infiltration systems more than 100 feet away from drinking water wells.

*Maximum Depth:* Wet ponds are also subject to a maximum depth limit for the “permanent pool” volume. Deep ponds (greater than 8 feet) may stratify during summer and create low oxygen conditions near the bottom resulting in re-release of phosphorus and other pollutants back into the water.

# Chapter 3 - Treatment Facility Menus

This chapter identifies choices that comprise the treatment facility menus referred to in Chapter 2. The menus in this chapter are discussed in the order of the decision process shown in Figure 2.1 and are as follows:

- Oil control menu, Section 3.2
- Phosphorus treatment menu, Section 3.3
- Enhanced treatment menu, Section 3.4
- Basic treatment menu, Section 3.5.

## 3.1 Guide to Applying Menus

**Read the step-by-step selection process for treatment facilities in Chapter 2.**

Determine which menus apply to the discharge situation. This will require knowledge of (1) the receiving water(s) that the project site ultimately discharges to, (2) whether Gig Harbor, Ecology or the USEPA, has identified the receiving water as subject to phosphorus control requirements, and (3) whether the site qualifies as subject to oil control.

**Determine if your project requires oil control.**

If the project requires oil control, or if you elect to provide enhanced oil pollution control, choose one of the options presented in the oil control menu, Section 3.2. Detailed designs for oil control facilities are given in subsequent chapters.

Note: One of the other three treatment menus will also need to be applied along with oil control.

**Find the treatment menu that applies to the project – basic, enhanced, or phosphorus.**

Each menu presents treatment options. A project site may be subject to both the enhanced treatment requirement and the phosphorus treatment requirement. In that event, select a facility or a treatment train that is listed in both treatment menus. Note: If flow control requirements apply, it will usually be more economical to use the combined detention/wet pool facilities. Detailed facility designs for all the possible options are given in subsequent chapters in this volume.

**Read Chapter 4 concerning general facility requirements.**

They apply to all facilities and may affect the design and placement of facilities on the site.

## 3.2 Oil Control Menu

**Note:** Where this menu is applicable, it is in addition to facilities required by one of the other treatment menus.

**Where Applied:** The oil control menu applies to projects that have high-use sites, or are subject to NPDES permits that require oil control. Specific applicability criteria are described in Section 2.1, Step 3.

**Application on the Project Site:** Oil control facilities are to be placed upstream of other facilities, as close to the source of oil generation as practical. For high-use sites located within a larger commercial center, only the impervious surface associated with the high-use portion of the site is subject to oil treatment requirements. If common parking for multiple businesses is provided, treatment shall be applied to the number of parking stalls required for the high-use business only. However, if the treatment collection area also receives runoff from other areas, the treatment facility must be sized to treat all water passing through it.

High-use roadway intersections shall treat lanes where vehicles accumulate during the signal cycle, including left and right turn lanes and through lanes, from the beginning of the left turn pocket. If no left turn pocket exists, the treatable area shall begin at a distance equal to three car lengths from the stop line. If runoff from the intersection drains to more than two collection areas that do not combine within the intersection, treatment may be limited to any two of the collection areas.

**Performance Goal:** The facility choices in the oil control menu are intended to achieve the goals of no ongoing or recurring visible sheen, and to have a 24-hour average Total Petroleum Hydrocarbon (TPH) concentration no greater than 10 mg/l, and a maximum of 15 mg/l for a discrete sample (grab sample).

**Note:** Use the method for NWTPH-Dx in Ecology publication No. ECY 97-602, Analytical Methods for Petroleum Hydrocarbons. If the concentration of gasoline is of interest, the method for NWTPH-Gx should be used to analyze grab samples.

**Options:** Oil control options include facilities that are small, treat runoff from a limited area, and require frequent maintenance. The options also include facilities that treat runoff from larger areas and generally have less frequent maintenance needs. **Note that Gig Harbor will not accept**

**ownership of some types of oil control facilities without prior approval.**

- **API-Type Oil/Water Separator** (see Chapter 10). Requires prior approval for city ownership.
- **Coalescing Plate Oil/Water Separator** (see Chapter 10). Requires prior approval for city ownership.
- **Linear Sand Filter** (see Chapter 7)
- **Oil Control Booms** (see Chapter 10, and WSDOT's *Highway Runoff Manual*).

**Note:** The linear sand filter is used in the basic, enhanced, and phosphorus treatment menus also. If used to satisfy one of those treatment requirements, the same facility shall not also be used to satisfy the oil control requirement unless enhanced maintenance (quarterly cleaning) is assured. This is to prevent clogging of the filter by oil so that it will function for suspended solids and phosphorus removal as well.

## 3.3 Phosphorus Treatment Menu

**Where Applied:** The phosphorus treatment menu applies to projects within watersheds that have been determined by Gig Harbor, Ecology, or the USEPA to be sensitive to phosphorus and are being managed to control phosphorus inputs from stormwater. This menu applies to stormwater conveyed to the lake by surface flow as well as to stormwater infiltrated within one-quarter mile of the lake in soils that do not meet the soil suitability criteria in Section 6.4. See Section 2.1, Step 5 for a more detailed explanation of applicability.

**Performance Goal:** The phosphorus menu facility choices are intended to achieve a goal of 50 percent total phosphorus removal for a range of influent concentrations of 0.1 to 0.5 mg/l total phosphorus. In addition, the choices are intended to achieve the basic treatment performance goal. The performance goal applies to the water quality design storm volume or flow rate, whichever is applicable, and on an annual average basis. The incremental portion of runoff in excess of the water quality design flow rate or volume can be routed around the facility (off-line treatment facilities), or can be passed through the facility (on-line treatment facilities) provided a net pollutant reduction is maintained. The design and operation of treatment facilities that engage a bypass at flow rates higher than the water quality design flow rate is encouraged. This is acceptable provided that the overall reduction in phosphorus loading (treated plus bypassed) is at least equal to that achieved with initiating bypass at the water quality design flow rate.

**Options:** Any one of the following options may be chosen to satisfy the phosphorus treatment requirement.

- **Infiltration with Appropriate Pretreatment** – see Chapter 6
  - Infiltration treatment

    If infiltration is through soils meeting the minimum site suitability criteria for infiltration treatment (see Chapter 6), a presettling basin or a basic treatment facility can serve for pretreatment.
  - Infiltration preceded by basic treatment

    If infiltration is through soils that do not meet the soil suitability criteria for infiltration treatment, treatment must be provided by a basic treatment facility, unless the soil and site fit the description in the next option below.
  - Infiltration preceded by phosphorus treatment

    If the soils do not meet the soil suitability criteria **and** the infiltration site is within one-fourth mile of a phosphorus-sensitive receiving water, or a tributary to that water, treatment must be provided by one of the other treatment facility options listed below.
- **Large Sand Filter** – see Chapter 7
- **Amended Sand Filter** – see the Ecology 2005 Stormwater Management Manual for Western Washington.

  Note: Processed steel fiber and crushed calcitic limestone are the only sand filter amendments for which data is available that documents increased dissolved metals removal. Use of amended sand filters for phosphorous treatment requires prior city approval for all applications.
- **Large Wet Pond** – see Chapter 9
- **Media Filter targeted for phosphorus removal.** Some proprietary Media Filter treatment systems have been approved by Ecology for phosphorus treatment. Those facilities approved by Ecology may be used in Gig Harbor with appropriate maintenance guarantees. However, facilities that will be city owned require prior city approval.

  Refer to the Ecology 2005 Stormwater Management Manual for Western Washington or the media filter manufacturer for facility sizing, construction, and maintenance requirements.

- **Ecology Embankment** – See WSDOT *Highway Runoff Manual*: <http://www.wsdot.wa.gov/Environment/WaterQuality/Runoff/HighwayRunoffManual.htm>.

- **Two-Facility Treatment Trains** – see Table 3.1.

**Table 3.1. Treatment Trains for Phosphorus Removal.**

| First Basic Treatment Facility | Second Treatment Facility |
|---|---|
| Biofiltration Swale | Basic Sand Filter or Sand Filter Vault |
| Filter Strip | Linear Sand Filter (no presettling needed) |
| Linear Sand Filter | Filter Strip |
| Basic Wet Pond | Basic Sand Filter or Sand Filter Vault |
| Wet Vault | Basic Sand Filter or Sand Filter Vault |
| Stormwater Treatment Wetland | Basic Sand Filter or Sand Filter Vault |
| Basic Combined Detention and Wet Pool | Basic Sand Filter or Sand Filter Vault |

## 3.4 Enhanced Treatment Menu

**Where Applied:** Enhanced treatment is required for particular project sites that discharge to fish-bearing streams, lakes, or to waters or conveyance systems tributary to fish-bearing streams or lakes. A description of the project sites that are subject to this requirement is provided in Section 2.1, Step 6.

**Performance Goal:** The enhanced menu facility choices are intended to provide a higher rate of removal of dissolved metals than basic treatment facilities. The choices are intended to achieve the basic treatment performance goal. The performance goal assumes that the facility is treating stormwater with dissolved Copper typically ranging from 0.003 to 0.02 mg/l, and dissolved Zinc ranging from 0.02 to 0.3 mg/l.

The performance goal applies to the water quality design storm volume or flow rate, whichever is applicable, and on an annual average basis. The incremental portion of runoff in excess of the water quality design flow rate or volume can be routed around the facility (off-line treatment facilities), or can be passed through the facility (on-line treatment facilities) provided a net pollutant reduction is maintained. The design and operation of treatment facilities that engage a bypass at flow rates higher than the water quality design flow rate is encouraged as long as the reduction in dissolved metals loading exceeds that achieved with initiating bypass at the water quality design flow rate.

**Options:** Any one of the following options may be chosen to satisfy the enhanced treatment requirement:

- **Infiltration with appropriate pretreatment** – see Chapter 5
  - Infiltration treatment

    If infiltration is through soils meeting the minimum site suitability criteria for infiltration treatment (see Chapter 6), a presettling basin or a basic treatment facility can serve for pretreatment.
  - Infiltration preceded by Basic Treatment

    If infiltration is through soils that do not meet the soil suitability criteria for infiltration treatment, treatment must be provided by a basic treatment facility unless the soil and site fit the description in the next option below.
  - Infiltration preceded by enhanced treatment

    If the soils do not meet the soil suitability criteria **and** the infiltration site is within one-fourth mile of a fish-bearing stream, a tributary to a fish-bearing stream, or a lake, treatment must be provided by one of the other treatment facility options listed below.
- **Large Sand Filter** – see Chapter 7
- **Amended Sand Filter** – see the Ecology 2005 Stormwater Management Manual for Western Washington.

  Note: Processed steel fiber and crushed calcitic limestone are the only sand filter amendments for which data is available that documents increased dissolved metals removal. Use of amended sand filters for enhanced treatment requires prior city approval.
- **Stormwater Treatment Wetland** – see Chapter 9
- **Compost-amended Filter Strip** – see Chapter 8
- **Ecology Embankment** – See WSDOT Highway Runoff Manual <http://www.wsdot.wa.gov/Environment/WaterQuality/Runoff/HighwayRunoffManual.htm>.
- **Two Facility Treatment Trains** – see Table 3.2
- **Bioretention/Rain Garden** – see Volume VI

  Note: Any stormwater runoff that infiltrates through the imported soil mix specified in Volume VI will have received the equivalent of enhanced treatment. Where bioretention/rain gardens are intended to fully meet treatment requirements, they must be

designed, using an approved continuous runoff model, to infiltrate 91 percent of the influent runoff file.

**Table 3.2. Treatment Trains for Dissolved Metals Removal.**

| First Basic Treatment Facility | Second Treatment Facility |
|---|---|
| Biofiltration Swale | Basic Sand Filter or Sand Filter Vault or Media Filter(1) |
| Filter Strip | Linear Sand Filter with no presettling cell needed |
| Linear Sand Filter | Filter Strip |
| Basic Wet Pond | Basic Sand Filter or Sand Filter Vault or Media Filter(1) |
| Wet Vault | Basic Sand Filter or Sand Filter Vault or Media Filter(1) |
| Basic Combined Detention/Wet Pool | Basic Sand Filter or Sand Filter Vault or Media Filter(1) |
| Basic Sand Filter or Sand Filter Vault with a presettling cell if the filter isn't preceded by a detention facility | Media Filter(1) |

(1) The media must be of a nature that has the capability to remove dissolved metals effectively as approved by Ecology and accepted by Gig Harbor. Gig Harbor will not accept ownership of media filtration systems without prior approval.

- **Other Ecology approved options** – As other BMPs are approved by Ecology for meeting enhanced treatment requirements, these may be added to Gig Harbor's approved list of acceptable enhanced treatment BMPs. Additional BMPs will be accepted by Gig Harbor on a case-by-case basis, after approval by Ecology.

## 3.5 Basic Treatment Menu

**Where Applied:** The basic treatment menu is generally applied to projects not subject to phosphorus or enhanced treatment requirements. See Section 2.1 for specific guidance on applicability.

**Performance Goal:** The basic treatment menu facility choices are intended to achieve 80 percent removal of total suspended solids for influent concentrations that are greater than 100 mg/l, but less than 200 mg/l. For influent concentrations greater than 200 mg/l, a higher treatment goal may be appropriate. For influent concentrations less than 100 mg/l, the facilities are intended to achieve an effluent goal of 20 mg/l total suspended solids.

The performance goal applies to the water quality design storm volume or flow rate, whichever is applicable. The goal also applies on an average annual basis to the entire annual discharge volume (treated plus bypassed). The incremental portion of runoff in excess of the water quality design flow rate or volume can be routed around the facility (off-line treatment facilities), or can be passed through the facility (on-line treatment facilities) provided a net total suspended solids reduction is maintained.

**Options:** Any one of the following options may be chosen to satisfy the basic treatment requirement:

- **Bioinfiltration Swale** – see Chapter 6
- **Infiltration** – see Chapter 6
- **Sand Filters** – see Chapter 7
- **Biofiltration Swales** – see Chapter 8
- **Filter Strips** – see Chapter 8
- **Basic Wet Pond** – see Chapter 9
- **Wet Vault** – see Chapter 9 (see note)
- **Stormwater Treatment Wetland** – see Chapter 9
- **Combined Detention and Wet Pool Facilities** – see Chapter 9
- **Bioretention/Rain Garden** – see Volume VI.

  Note: Any stormwater runoff that infiltrates through the imported soil mix specified in Volume VI will have received the equivalent of enhanced treatment. Where bioretention/rain gardens are intended to fully meet treatment requirements, they must be designed, using an approved continuous runoff model, to infiltrate 91 percent of the influent runoff file.

- **Ecology Embankment** – See WSDOT Highway Runoff Manual <http://www.wsdot.wa.gov/Environment/WaterQuality/Runoff/HighwayRunoffManual.htm> and Ecology's Web site for additional pertinent design and maintenance.

- Some **proprietary media filtration systems** are also approved for basic treatment. Those facilities approved by Ecology may be used in Gig Harbor with appropriate maintenance guarantees. However, facilities that will be city owned require prior city approval.

  Refer to the Ecology 2005 Stormwater Management Manual for Western Washington or the media filter manufacturer for facility sizing, construction, and maintenance requirements.

- **Other Ecology approved options** – As other BMPs are approved by Ecology for meeting enhanced treatment requirements, these may be added to Gig Harbor's approved list of acceptable

enhanced treatment BMPs. Additional BMPs will be accepted by Gig Harbor on a case-by-case basis, after approval by Ecology.

**Note:** A wet vault may be used for commercial, industrial, or road projects if there are space limitations. Ecology and Gig Harbor discourage the use of wet vaults for residential projects. Combined detention/wet vaults are allowed; see Section 9.3.

# Chapter 4 - General Requirements for Stormwater Treatment Facilities

This chapter addresses general requirements for treatment facilities. Requirements discussed in this chapter include design volumes and flows, sequencing of facilities, liners, and hydraulic structures for splitting or dispersing flows. Additional requirements for individual facilities are discussed in subsequent chapters.

## 4.1 Design Volume and Flow

### 4.1.1 Water Quality Design Storm Volume

The 91st percentile, 24-hour runoff volume estimated by an approved continuous runoff model is used as the water quality design storm volume.

### 4.1.2 Water Quality Design Flow Rate

*Downstream of detention facilities*: The full 2-year recurrence interval release rate from the detention facility.

An approved continuous runoff model should identify the 2-year recurrence interval flow rate discharged by a detention facility that is designed to meet the flow duration standard.

*Preceding detention facilities or when detention facilities are not required*: The flow rate at or below which 91 percent of the runoff volume, as estimated by an approved continuous runoff model, will be treated.

Design criteria for treatment facilities are assigned to achieve the applicable performance goal at the water quality design flow rate (e.g., 80 percent total suspended solids removal).

- *Off-line facilities*: For treatment facilities not preceded by an equalization or storage basin, and when runoff flow rates exceed the water quality design flow rate, the treatment facility should continue to receive and treat the water quality design flow rate to the applicable treatment performance goal. Only the higher incremental portion of flow rates is bypassed around a treatment facility.

  Treatment facilities preceded by an equalization or storage basin may identify a lower water quality design flow rate provided that at least 91 percent of the estimated runoff volume in the time series of an approved continuous runoff model is treated to the applicable performance goals (e.g., 80 percent total suspended solids removal

at the water quality design flow rate and 80 percent total suspended solids removal on an annual average basis).

- *On-line facilities*: Runoff flow rates in excess of the water quality design flow rate can be routed through the facility provided a net pollutant reduction is maintained, and the applicable annual average performance goal is likely to be met.

Treatment facilities that are located downstream of detention facilities should only be designed as on-line facilities.

### 4.1.3 Flows Requiring Treatment

Runoff from pollution-generating impervious or pervious surfaces must be treated. Pollution generating impervious surfaces (PGIS) are those impervious surfaces considered to be a significant source of pollutants in stormwater runoff. The glossary in Volume I provides additional definitions and clarification of these terms.

Such surfaces include those which are subject to: vehicular use; industrial activities; or storage of erodible or leachable materials, wastes, or chemicals, and which receive direct rainfall or the run-on or blow-in of rainfall. Erodible or leachable materials, wastes, or chemicals are those substances which, when exposed to rainfall, measurably alter the physical or chemical characteristics of the rainfall runoff. Examples include erodible soils that are stockpiled, uncovered process wastes, manure, fertilizers, oily substances, ashes, kiln dust, and garbage dumpster leakage. Metal roofs are also considered to be PGIS unless they are coated with an inert, non-leachable material (e.g., baked enamel coating).

A surface, whether paved or not, shall be considered subject to vehicular use if it is regularly used by motor vehicles. The following are considered regularly-used surfaces: roads, unvegetated road shoulders, bike lanes within the traveled lane of a roadway, driveways, parking lots, unfenced fire lanes, vehicular equipment storage yards, and airport runways.

The following are not considered regularly-used surfaces: paved bicycle pathways separated from and not subject to drainage from roads for motor vehicles, fenced fire lanes, and infrequently used maintenance access roads.

Pollution generating pervious surfaces (PGPS) are any pervious surface subject to the use of pesticides and fertilizers or loss of soil. Typical PGPS include lawns, landscaped areas, golf courses, parks, cemeteries, and sports fields.

***Summary of Areas Needing Treatment***

- All runoff from pollution-generating impervious surfaces is to be treated through the water quality facilities specified in Chapter 2 and Chapter 3.

- Lawns and landscaped areas specified are pervious but also generate run-off into street drainage systems. In those cases the runoff from the pervious areas must be estimated and added to the runoff from impervious areas to size treatment facilities.

- Runoff from backyards can drain into native vegetation in areas designated as open space or buffers. In these cases, the area in native vegetation may be used to provide the requisite water quality treatment, provided it meets the requirements outlined in Volume VI, Chapter 3 for dispersion.

- Drainage from impervious surfaces that are not pollution-generating need not be treated and may bypass runoff treatment, if it is not mingled with runoff from pollution-generating surfaces.

- Roof runoff is still subject to flow control per Minimum Requirement #7. Note that metal roofs are considered pollution generating unless they are coated with an inert non-leachable material.

- Drainage from areas in native vegetation should not be mixed with untreated runoff from streets and driveways, if possible. It is best to infiltrate or disperse this relatively clean runoff to maximize recharge to shallow groundwater, wetlands, and streams (see Volume VI, Chapter 3 for flow dispersion requirements).

- If runoff from non-pollution generating surfaces reaches a runoff treatment BMP, flows from those areas must be included in the sizing calculations for the facility. Once runoff from non-pollution generating areas is mixed with runoff from pollution-generating areas, it cannot be separated before treatment.

## 4.2 Sequence of Facilities

The enhanced treatment and phosphorus removal menus, described in Chapter 3, include treatment options in which more than one type of treatment facility is used. In those options, the sequence of facilities is prescribed. This is because the specific pollutant removal role of the second or third facility in a treatment often assumes that significant solids' settling has already occurred. For example, phosphorus removal using a

two-facility treatment relies on the second facility (sand filter) to remove a finer fraction of solids than those removed by the first facility.

There is also the question of whether treatment facilities should be placed upstream or downstream of detention facilities that are needed for flow control purposes. In general, all treatment facilities may be installed upstream of detention facilities, although presettling basins are needed for sand filter and sand infiltration systems. However, not all treatment facilities can function effectively if located downstream of detention facilities. Those facilities that treat unconcentrated flows, such as filter strips and continuous inflow biofiltration swales, are usually not practical downstream of detention facilities. Other types of treatment facilities present special problems that must be considered before placement downstream is advisable.

For instance, prolonged flows discharged by a detention facility that is designed to meet the flow duration standard of Minimum Requirement #7 may interfere with proper functioning of basic biofiltration swales and sand filters. Grasses typically specified in the basic biofiltration swale design will not survive. A wet biofiltration swale design would be a better choice.

For sand filters, the prolonged flows may cause extended saturation periods within the filter. Saturated sand can lose all oxygen and become anoxic. If that occurs, some amount of phosphorus captured within the filter may become soluble and released. To prevent long periods of sand saturation, adjustments may be necessary after the sand filter is in operation to bypass some areas of the filter. This bypassing will allow them to drain completely. It may also be possible to employ a different type of facility that is less sensitive to prolonged flows.

Oil control facilities for runoff treatment must be located upstream of treatment and detention facilities and as close to the source of oil-generating activity as possible.

Table 4.1 summarizes placement considerations of treatment facilities in relation to detention.

## 4.3 Facility Liners

Liners are intended to reduce the likelihood that pollutants in stormwater will reach groundwater when runoff treatment facilities are constructed. In addition to groundwater protection considerations, some facility types require permanent water for proper functioning. An example is the first cell of a wet pond.

**Table 4.1. Treatment Facility Placement in Relation to Detention.**

| Water Quality Facility | Preceding Detention | Following Detention |
|---|---|---|
| Basic biofiltration swale (Chapter 8) | OK | OK. Prolonged flows may reduce grass survival. Consider wet biofiltration swale. |
| Wet biofiltration swale (Chapter 8) | OK | OK |
| Filter strip (Chapter 8) | OK | No—must be installed before flows concentrate. |
| Basic or large wet pond (Chapter 9) | OK | OK—less water level fluctuation in ponds downstream of detention may improve aesthetic qualities and performance. |
| Basic or large combined detention and wet pond (Chapter 9) | Not applicable | Not applicable |
| Wet vault (Chapter 9) | OK | OK |
| Basic or large sand filter or sand filter vault (Chapter 7) | OK, but presettling and control of floatables needed | OK—sand filters downstream of detention facilities may require field adjustments if prolonged flows cause sand saturation and interfere with phosphorus removal. |
| Stormwater treatment wetland/ pond (Chapter 9) | OK | OK—less water level fluctuation and better plant diversity are possible if the stormwater wetland is located downstream of the detention facility. |

Treatment liners amend the soil with materials that treat stormwater before it reaches more freely draining soils. They have slow rates of infiltration, generally less than 2.4 inches per hour ($1.7 \times 10^{-3}$ centimeters squared), but not as slow as low permeability liners. Treatment liners may use in-place native soils or imported soils.

Low permeability liners reduce infiltration to a very slow rate, generally less than 0.02 inches per hour ($1.4 \times 10^{-5}$ centimeters squared). These types of liners are used for industrial or commercial sites with a potential for high pollutant loading in the stormwater runoff. Low permeability liners may be fashioned from compacted till, clay, geomembrane, or concrete. See Sections 4.3.2 and 4.3.3 for more specific design criteria for treatment liners and low permeability liners.

### 4.3.1 General Design Criteria

- Table 4.2 shows the type of liner required for use with various runoff treatment facilities. Other liner configurations may be used with prior approval from the city.

- Liners shall be evenly placed over the bottom and/or sides of the treatment area of the facility as indicated in Table 4.2. Areas above the treatment volumes that are required to pass flows greater

than the water quality treatment flow (or volume) need not be lined. However, the lining must be extended to the top of the interior side slope and anchored if it cannot be permanently secured by other means.

**Table 4.2. Lining Types Required for Runoff Treatment Facilities.**

| Water Quality Facility | Area to be Lined | Type of Liner Required |
|---|---|---|
| Presettling basin | Bottom and sides | Low permeability liner or Treatment liner (If the basin will intercept the seasonal high groundwater table, a treatment liner may be recommended.) |
| Wet pond | First cell: bottom and sides to water quality design water surface<br>----------<br>Second cell: bottom and sides to water quality design water surface | Low permeability liner or Treatment liner<br>----------<br>Treatment liner |
| Combined detention/water quality facility | First cell: bottom and sides to water quality design water surface<br>----------<br>Second cell: bottom and sides to water quality design water surface | Low permeability liner or Treatment liner<br>----------<br>Treatment liner |
| Stormwater wetland | Bottom and sides, both cells | Low permeability liner |
| Sand filtration basin | Basin sides only | Treatment liner |
| Sand filter vault | Not applicable | No liner needed |
| Linear sand filter | Not applicable if in vault<br>Bottom and sides of presettling cell if not in vault | No liner needed<br>Low permeability or treatment liner |
| Media filter (in vault) | Not applicable | No liner needed |
| Wet vault | Not applicable | No liner needed |

- For low permeability liners, the following criteria apply:
  - Where the seasonal high groundwater elevation is likely to contact a low permeability liner, liner buoyancy may be a concern. In these instances, use of a low permeability liner shall be evaluated and recommended by a geotechnical engineer.
  - Where grass must be planted over a low permeability liner per the facility design, a minimum of 6 inches of good topsoil or compost-amended native soil (2 inches compost tilled into 6 inches of native till soil) must be placed over the liner in the area to be planted. Twelve inches of cover is preferred.
- If a treatment liner will be below the seasonal high water level, the pollutant removal performance of the liner and facility must be

evaluated by a geotechnical or groundwater specialist and found to be as protective as if the liner and facility were above the level of the groundwater.

### 4.3.2 Design Criteria for Treatment Liners

This section presents the design criteria for treatment liners.

- A 2-foot thick layer of soil with a minimum organic content of 5 percent AND a minimum cation exchange capacity (CEC) of 5 milliequivalents/100 grams can be used as a treatment layer beneath a water quality or detention facility.

- To demonstrate that in-place soils meet the above criteria, one sample per 1,000 square feet of facility area shall be tested. Each sample shall be a composite of subsamples taken throughout the depth of the treatment layer (usually 2 to 6-feet below the expected facility invert).

- Typically, side wall seepage is not a concern if the seepage flows through the same stratum as the bottom of the treatment BMP. However, if the treatment soil is an engineered soil or has very low permeability, the potential to bypass the treatment soil through the side walls may be significant. In those cases, the treatment BMP side walls may be lined with at least 18 inches of treatment soil, as described above, to prevent untreated seepage. This lesser soil thickness is based on unsaturated flow as a result of alternating wet-dry periods.

- Organic content shall be measured on a dry weight basis using American Society for Testing and Materials (ASTM) D2974.

- CEC shall be tested using U.S. Environmental Protection Agency (U.S. EPA) laboratory method 9081.

- Certification by a soils testing laboratory that imported soil meets the organic content and CEC criteria above shall be provided to Gig Harbor.

- Animal manures used in treatment soil layers must be sterilized because of potential for bacterial contamination of the groundwater.

### 4.3.3 Design Criteria for Low Permeability Liner Options

This section presents the design criteria for each of the following four low permeability liner options: compacted till liners, clay liners, geomembrane liners, and concrete liners.

### *Compacted Till Liners*

- Liner thickness shall be 18 inches after compaction.
- Soil shall be compacted to 95 percent minimum dry density, modified proctor method (ASTM D-1557).
- A different depth and density sufficient to retard the infiltration rate to $2.4 \times 10^{-5}$ inches per minute ($1 \times 10^{-6}$ centimeters squared) may also be used instead of Criteria 1 and 2.
- Soil should be placed in 6-inch lifts.
- Soils may be used that meet the gradation in Table 4.3 below:

**Table 4.3. Compacted Till Liners.**

| Sieve Size | Percent Passing |
|---|---|
| 6-inch | 100 |
| 4-inch | 90 |
| #4 | 70 - 100 |
| #200 | 20 |

### *Clay Liners*

- Liner thickness shall be 12 inches.
- Clay shall be compacted to 95 percent minimum dry density, modified proctor method (ASTM D-1557).
- A different depth and density sufficient to retard the infiltration rate to $2.4 \times 10^{-5}$ inches per minute ($1 \times 10^{-6}$ centimeters squared) may also be used instead of the above criteria.
- Plasticity index shall not be less than 15 percent (ASTM D-423, D-424).
- Liquid limit of clay shall not be less than 30 percent (ASTM D-2216).
- Clay particles passing shall not be less than 30 percent (ASTM D-422).
- The slope of clay liners must be restricted to 3H:1V for all areas requiring soil cover; otherwise, the soil layer must be stabilized by another method so that soil slippage into the facility does not occur. Any alternative soil stabilization method must take maintenance access into consideration.

- Where clay liners form the sides of ponds, the interior side slope should not be steeper than 3H: 1V, irrespective of fencing. This restriction is to ensure that anyone falling into the pond may safely climb out.

### *Geomembrane Liners*

- Geomembrane liners shall be ultraviolet (UV) light resistant and have a minimum thickness of 30 mils. A thickness of 40 mils shall be used in areas of maintenance access or where heavy machinery must be operated over the membrane.

- The geomembrane fabric shall be protected from puncture, tearing, and abrasion by installing geotextile fabric on the top and bottom of the geomembrane determined to have a high survivability per the WSDOT standard specifications as amended, specifically Section 9-33 Construction Geotextile (2006 or the latest version as amended). Equivalent methods for protection of the geomembrane liner will be considered. Equivalency will be judged on the basis of ability to protect the geomembrane from puncture, tearing, and abrasion.

- Geomembranes shall be bedded according to the manufacturer's recommendations.

- Liners must be covered with 12 inches of top dressing forming the bottom and sides of the water quality facility, except for linear sand filters. Top dressing shall consist of 6 inches of crushed rock covered with 6 inches of native soil. The rock layer is to mark the location of the liner for future maintenance operations. As an alternative to crushed rock, 12 inches of native soil may be used if orange plastic “safety fencing” or another highly visible, continuous marker is embedded 6 inches above the membrane.

- If possible, liners should be of a contrasting color so that maintenance workers are aware of any areas where a liner may have become exposed when maintaining the facility.

- Geomembrane liners shall not be used on slopes steeper than 5H:1V to prevent the top dressing material from slipping. Textured liners may be used on slopes up to 3H:1V upon recommendation by a geotechnical engineer that the top dressing will be stable for all site conditions, including maintenance.

### *Concrete Liners*

- Concrete liners may also be used for sedimentation chambers and for sedimentation and filtration basins less than 1,000 square feet in area. Concrete shall be 5-inch thick Class 3000 or better and

shall be reinforced by steel wire mesh. The steel wire mesh shall be six (6) gage wire or larger and 6 inch by 6 inch mesh or smaller. An "Ordinary Surface Finish" is required. When the underlying soil is clay or has an unconfined compressive strength of 0.25 ton per square foot or less, the concrete shall have a minimum 6 inch compacted aggregate base consisting of coarse sand and river stone, crushed stone or equivalent with diameter of 0.75 to 1 inch. Where visible, the concrete shall be inspected annually and all cracks shall be sealed.

- Portland cement liners are allowed irrespective of facility size, and shotcrete may be used on slopes. However, specifications must be developed by a professional engineer who certifies the liner against cracking or losing water retention ability under expected conditions of operation, including facility maintenance operations. Weight of maintenance equipment can be up to 80,000 pounds when fully loaded.

- Asphalt concrete may not be used for liners due to its permeability to many organic pollutants.

- If grass is to be grown over a concrete liner, slopes must be no steeper than 5H: 1V to prevent the top dressing material from slipping. Textured liners may be used on slopes up to 3H:1V upon recommendation by a geotechnical engineer that the top dressing will be stable for all site conditions, including maintenance.

## 4.4 Maintenance Standards for Drainage Facilities

Facility-specific maintenance standards are provided in Volume I, Appendix I-B. The standards are intended to provide conditions for determining if maintenance actions are required as identified through inspection. They are not intended to be measures of the facility's required condition at all times between inspections. In other words, exceedance of these conditions at any time between inspections and/or maintenance does not automatically constitute a violation of these standards. However, based upon inspection observations, the inspection and maintenance schedules shall be adjusted to minimize the length of time that a facility is in a condition that requires a maintenance action.

# Chapter 5 - Pretreatment

## 5.1 Purpose

This chapter presents the methods that may be used to provide pretreatment prior to basic or enhanced runoff treatment facilities. Pretreatment must be provided in the following applications:

- For sand and media filtration and infiltration BMPs to protect them from excessive siltation and debris
- Where the basic treatment facility or the receiving water may be adversely affected by non-targeted pollutants (e.g., oil), or may by overwhelmed by a heavy load of targeted pollutants (e.g., suspended solids).

## 5.2 Application

Presettling basins are a typical pretreatment BMP used to remove suspended solids. All of the basic runoff treatment facilities may be used for pretreatment to reduce suspended solids. Several of the manufactured storm drain structures have been approved by Ecology for pretreatment for oil or total suspended solids reduction. See Ecology's Web site for the latest approved BMPs.

A detention pond sized to meet the flow control standard in Volume I may also be used to provide pretreatment for suspended solids removal.

## 5.3 Best Management Practices for Pretreatment

This chapter has only one BMP – BMP T5.10 for presettling basins.

## BMP T5.10 Presettling Basin

A presettling basin provides pretreatment of runoff in order to remove suspended solids, which can impact other runoff treatment BMPs.

### *Application and Limitations*

Runoff treated by a presettling basin may not be discharged directly to a receiving water or to groundwater; it must be further treated by a basic or enhanced runoff treatment BMP.

### *Design Criteria*

- A presettling basin shall be designed to include a wet pool sedimentation area at least 6 inches deep at the bottom of the facility. The total treatment volume of the presettling basin shall be at least 30 percent of the total water quality treatment design volume.

- Drawdown time of the presettling storage area (excluding wet pool area) must not exceed 40 hours.

- If the runoff in the presettling basin will be in direct contact with the soil, it must be lined per the liner requirement in Section 4.3.

- The presettling basin shall conform to the following:

    - The length-to-width ratio shall be at least 3:1. Berms or baffles may be used to lengthen the flowpath.

    - The minimum depth shall be 4 feet; the maximum depth shall be 6 feet.

- Inlets and outlets shall be designed to minimize velocity and reduce turbulence. Inlet and outlet structures should be located at extreme ends of the basin in order to maximize particle-settling opportunities.

- Attachments Section B, Detail 6.0 shows an example schematic.

### *Site Constraints and Setbacks*

Site constraints are any manmade restrictions such as property lines, easements, structures, etc. that impose constraints on development. Constraints may also be imposed from natural features such as requirements of the Gig Harbor's Critical Areas Ordinance and rules. These should also be reviewed for specific application to the proposed development.

All facilities shall be a minimum of 20 feet from any structure, property line, and any vegetative buffer required by Gig Harbor.

All facilities shall be 100 feet from any septic tank/drain field (except wet vaults shall be a minimum of 20 feet).

All facilities shall be a minimum of 50 feet from any steep (greater than 15 percent) slope. A geotechnical report must address the potential impact of a wet pond on a steep slope.

Embankments that impound water must comply with the Washington State Dam Safety Regulations (Chapter 173-175 WAC). If the impoundment has a storage capacity (including both water and sediment storage volumes) greater than 10 acre-feet (435,600 cubic feet or 3.26 million gallons) above natural ground level, then dam safety design and review are required by Ecology. See Volume III for more detail.

# Chapter 6 - Infiltration and Bioinfiltration Treatment Facilities

## 6.1 Purpose

This chapter provides site suitability, design, and maintenance criteria for infiltration treatment systems. Infiltration treatment BMPs serve the dual purpose of removing pollutants (total suspended solids, heavy metals, phosphates, and organics) from stormwater and recharging aquifers.

A stormwater infiltration treatment facility is an impoundment; typically a basin, trench, or bioinfiltration swale whose underlying soil removes pollutants from stormwater. The infiltration BMPs described in this chapter include:

- BMP T6.10 Infiltration basins
- BMP T6.20 Infiltration trenches
- BMP T6.30 Bioinfiltration swales
- BMP T6.40 Bioretention.

**Note that the soil infiltration requirements for water quality treatment are substantially different from those for flow control.** Infiltration treatment soils must contain sufficient organic matter and/or clays to sorb, decompose, and/or filter stormwater pollutants. Pollutant/soil contact time, soil sorptive capacity, and soil aerobic conditions are important design considerations. Specific requirements are outlined in Sections 6.4 below.

To reduce duplication of design guidance, information regarding site criteria, site suitability, design details, and guidance of a general nature for infiltration basins and trenches are only provided in Volume III, Chapter 3. The text in Chapter 3 has been modified to indicate where design guidance applies only to infiltration treatment systems, not infiltration facilities serving only a flow control function. Design details regarding BMP T6.30, Bioinfiltration swales, is retained in this chapter as that BMP serves only an infiltration treatment function. Design details regarding BMP T6.40, Bioretention are provided in Volume VI.

## 6.2 Application

These infiltration and bioinfiltration treatment measures are capable of achieving the performance objectives cited in Chapter 3 for specific treatment menus. In general, these treatment techniques can capture and remove or reduce the target pollutants to levels that:

- Will not adversely affect public health or beneficial uses of surface and groundwater resources, and
- Will not cause a violation of groundwater quality standards

Infiltration treatment systems are typically installed:

- As off-line systems, or on-line for small drainages
- As a polishing treatment for street/highway runoff after pretreatment for total suspended solids and oil
- As part of a treatment train
- As retrofits at sites with limited land areas, such as residential lots, commercial areas, parking lots, and open space areas
- With appropriate pretreatment for oil and silt control to prevent clogging. Appropriate pretreatment devices include a presettling basin, wet pond/vault, biofilter, constructed wetland, media filter, and oil/water separator.

An infiltration basin is preferred, where applicable, and where a trench or bioinfiltration swale cannot be sufficiently maintained.

## 6.3 General Considerations

See Volume III, Section 3.3.

## 6.4 Soil Requirements for Infiltration for Water Quality Treatment

*Infiltration treatment* (i.e., an infiltration basin or trench) meets the requirements for *basic*, *phosphorus*, and *enhanced* treatment if the 91$^{st}$ percentile, 24-hour runoff volume (indicated by Western Washington Hydrology Model [WWHM] or MGSFlood) is successfully infiltrated within 48 hours maximum. Soil suitability criteria #1 and #2 below apply for infiltration treatment basins and trenches:

Soil suitability criteria #1: The short-term soil infiltration rate (field measured, before safety factors) must be 2.4 inches per hour, or less, to a depth of 2.5 times the maximum design pond water depth, or a minimum of 6 feet below the base of the infiltration facility. Long-term (design) infiltration rates up to 2.0 inches/hour can be used with approval by Gig Harbor, if the infiltration receptor is not a sole-source aquifer, and in the judgment of the site professional, the treatment soil has characteristics comparable to those specified in soil suitability criteria #2 (summarized below) to adequately control the target pollutants.

Soil suitability criteria #2: To a minimum depth of 18 inches (measured from bottom of facility):

- CEC of the soil must be greater than or equal to 5 milliequivalents per 100 milligrams of dry soil. Lower CEC content may be considered if it is based on a soil loading capacity determination for the target pollutants that is approved by Gig Harbor.

- Organic Content of the treatment soil (ASTM D-2974): Organic matter can increase the sorptive capacity of the soil for some pollutants. Soil organic content should be at least 1 percent, however the site professional should evaluate whether the organic matter content is sufficient for control of the target pollutant(s).

*Bioinfiltration swales* meet the requirements for basic treatment only. Bioinfiltration swales are subject to soil suitability criteria #1 and #2 summarized above.

For both infiltration treatment and bioinfiltration swales, the site infiltration rate must be determined using one of three methods. Each is described in detail in Volume III, Appendix III-A:

- Field testing (must incorporate safety factor)

- U.S. Department of Agriculture (USDA) Soil Textural Classification

- ASTM Gradation Testing.

Soil requirements for *bioretention* facilities are provided in Volume VI, Section 3.8.

## 6.5 Best Management Practices for Infiltration and Bioinfiltration Treatment

The four BMPs discussed below are recognized as effective treatment techniques using infiltration and bioinfiltration. Selection of a specific BMP should be coordinated with the treatment facility menus provided in Chapter 3.

### BMP T6.10 Infiltration Basins

See Volume III, Section 3.3.5.

### BMP T6.20 Infiltration Trenches

See Volume III, Section 3.3.6.

## BMP T6.30 Bioinfiltration Swale

Bioinfiltration swales, also known as Grass Percolation Areas, combine grassy vegetation and soils to remove stormwater pollutants by percolation into the ground. Their pollutant removal mechanisms include filtration, soil sorption, and uptake by vegetative root zones.

In general, bioinfiltration swales are used for treating stormwater runoff from roofs, roads and parking lots. Runoff volumes greater than water quality design volume are typically overflowed to the subsurface through an appropriate conveyance facility such as a dry well, or an overflow channel to surface water. Overflows that are directed to a surface water must meet Minimum Requirement #7 or #8 (whichever is applicable) unless the discharge is to a marine water, or qualifies for a flow control exemption in accordance with the criteria in Minimum Requirement #7.

### *Additional Design Criteria Specific for Bioinfiltration Swales*

See Volume III, Section 3.3 for general design criteria for infiltration facilities:

- The space available for ponding water within a bioinfiltration swale can be sized by either:
    - Completely retaining the water quality design volume, i.e., the 91st percentile, 24-hour runoff volume indicated by an approved continuous runoff model. No reduction in volume is taken for any infiltration. Under this option, the overflow to a dry well or to a surface water must be above the elevation corresponding to the water quality design volume.
    - Using the same design sizing procedures outlined in Volume III, Chapter 3 for infiltration facilities designed as treatment facilities.
- Drawdown time for the water quality design volume: 48 hours maximum.
- Swale bottom: flat with a longitudinal slope less than 1 percent.
- The maximum ponded level: 6 inches.
- Treatment soil to be at least 18 inches thick with a CEC of at least 5 meq/100 gm dry soil, organic content of at least 1 percent, and sufficient target pollutant loading capacity. The design soil thickness may be reduced to as low as 6 inches if appropriate performance data demonstrates that the vegetated root zone and the natural soil can be expected to provide adequate removal and

loading capacities for the target pollutants. The design professional should calculate the pollutant loading capacity of the treatment soil to estimate if there is sufficient treatment soil volume for an acceptable design period. (See Criteria for Assessing the Trace Element Removal Capacity of Biofiltration Systems, Stan Miller, Spokane County, June 2000.)

- Other combinations of treatment soil thickness, CEC, and organic content design factors can be considered if it is demonstrated that the soil and vegetation will provide a target pollutant loading capacity and performance level acceptable to Gig Harbor.

- The treatment zone depth of 6 inches or more should contain sufficient organics and texture to ensure good growth of the vegetation.

- The treatment soil infiltration rate should not exceed 1 inch per hour for a treatment zone depth of 6 inches relying on the root zone to enhance pollutant removal. If a design soil depth of 18 inches is used, then a maximum infiltration rate of 2.4 inches per hour is applicable.

- Use native or adapted grass should be used.

- Pretreatment of debris, gross total suspended solids, and oil and grease to prevent the clogging of the treatment soil and/or growth of the vegetation, where necessary.

- Identify pollutants, particularly in industrial and commercial area runoff, that could cause a violation of Ecology's ground water quality Standards (Chapter 173-200 WAC). Include appropriate mitigation measures (pretreatment, source control, etc.) for those pollutants.

### BMP T6.40 Bioretention

See Volume VI, Section 3.8.

# Chapter 7 - Sand Filtration Treatment Facilities

*Note: Figures in Chapter 7 are courtesy of King County, except as noted.*

This chapter presents criteria for the design and construction of runoff treatment sand filters including basin, vault, and linear filters. See Volume I, Minimum Requirement #10, and Appendix I-B for additional information on maintenance requirements.

Three BMPs are discussed in this chapter:

- BMP T7.10 Sand Filter Basin
- BMP T7.20 Sand Filter Vault
- BMP T7.30 Linear Sand Filter.

## 7.1 Purpose

To collect and treat the design runoff volume to remove total suspended solids, phosphorous, and insoluble organics (including oils) from stormwater.

## 7.2 Description

A typical sand filtration system consists of a pretreatment system, flow spreader(s), a sand bed, and the underdrain piping. The sand filter bed includes a geotextile fabric between the sand bed and the bottom underdrain system.

An impermeable liner under the facility may also be needed if the filtered runoff requires additional treatment to remove soluble groundwater pollutants, or in cases where additional groundwater protection was mandated. The variations of a sand filter include a basic or large sand filter basin, sand filter basin with level spreader, sand filter vault, and linear sand filter. Figures 7.1 through 7.5 provide examples of various sand filter configurations. Attachments Section B, Details 12.0 and 13.0 provide additional sand filtration schematics. Details 8.0 and 9.0 also provide example diversion structure details.

## 7.3 Performance Objectives

**Basic sand filter:** Basic sand filters are expected to achieve the performance goals for basic treatment. Based upon experience in King County and Austin, Texas basic sand filters should be capable of achieving the following average pollutant removals:

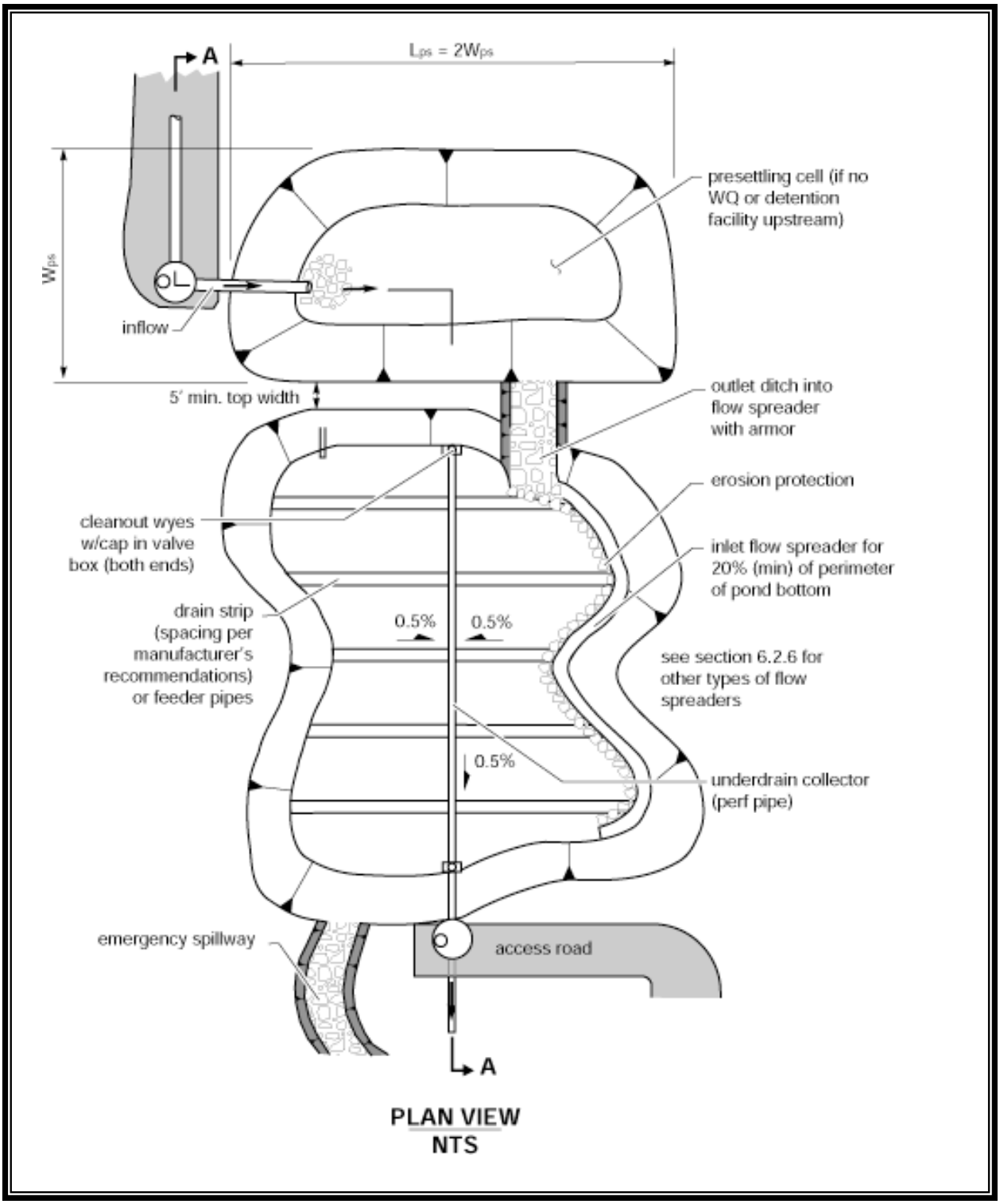


**Figure 7.1a. Sand Filter Basin with Pretreatment Cell.**

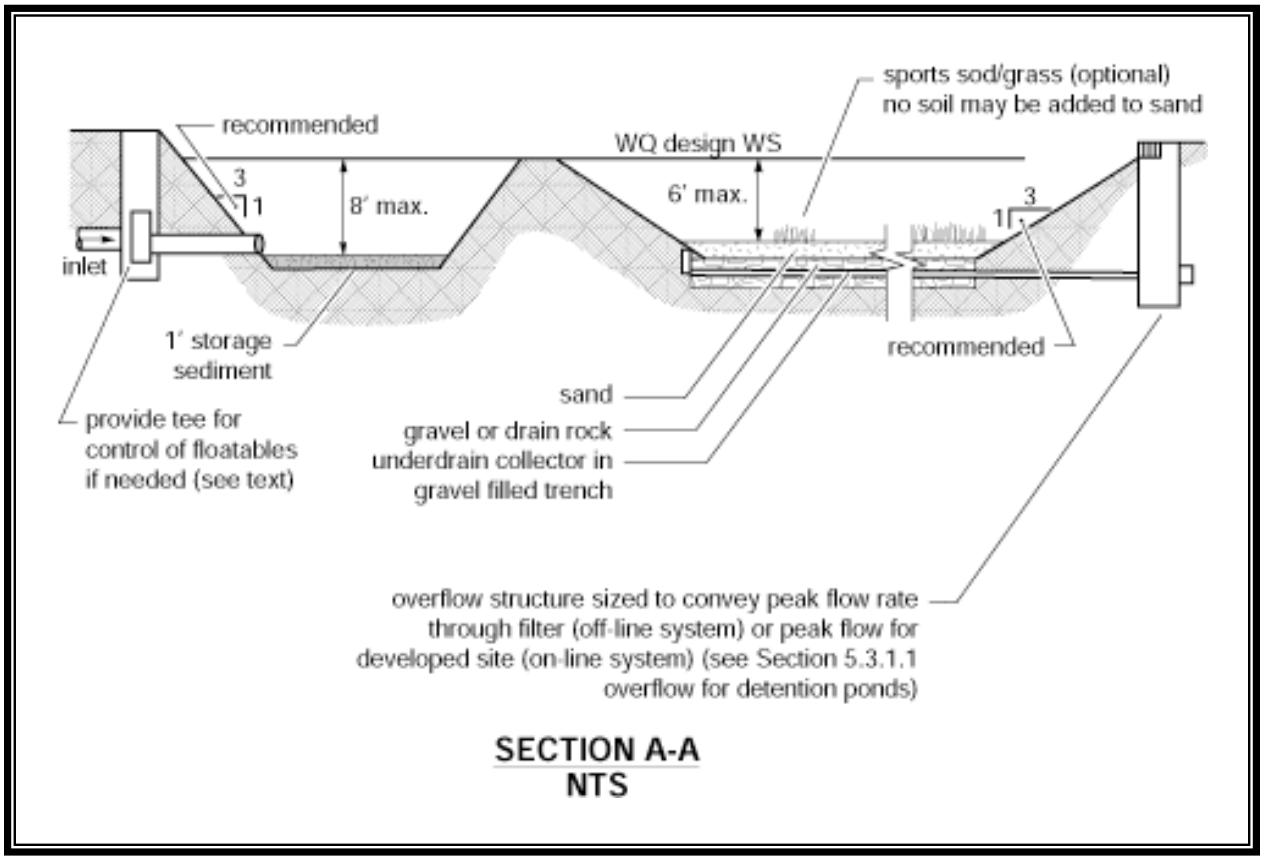


**Figure 7.1b. Sand Filter Basin with Pretreatment Cell (cont).**

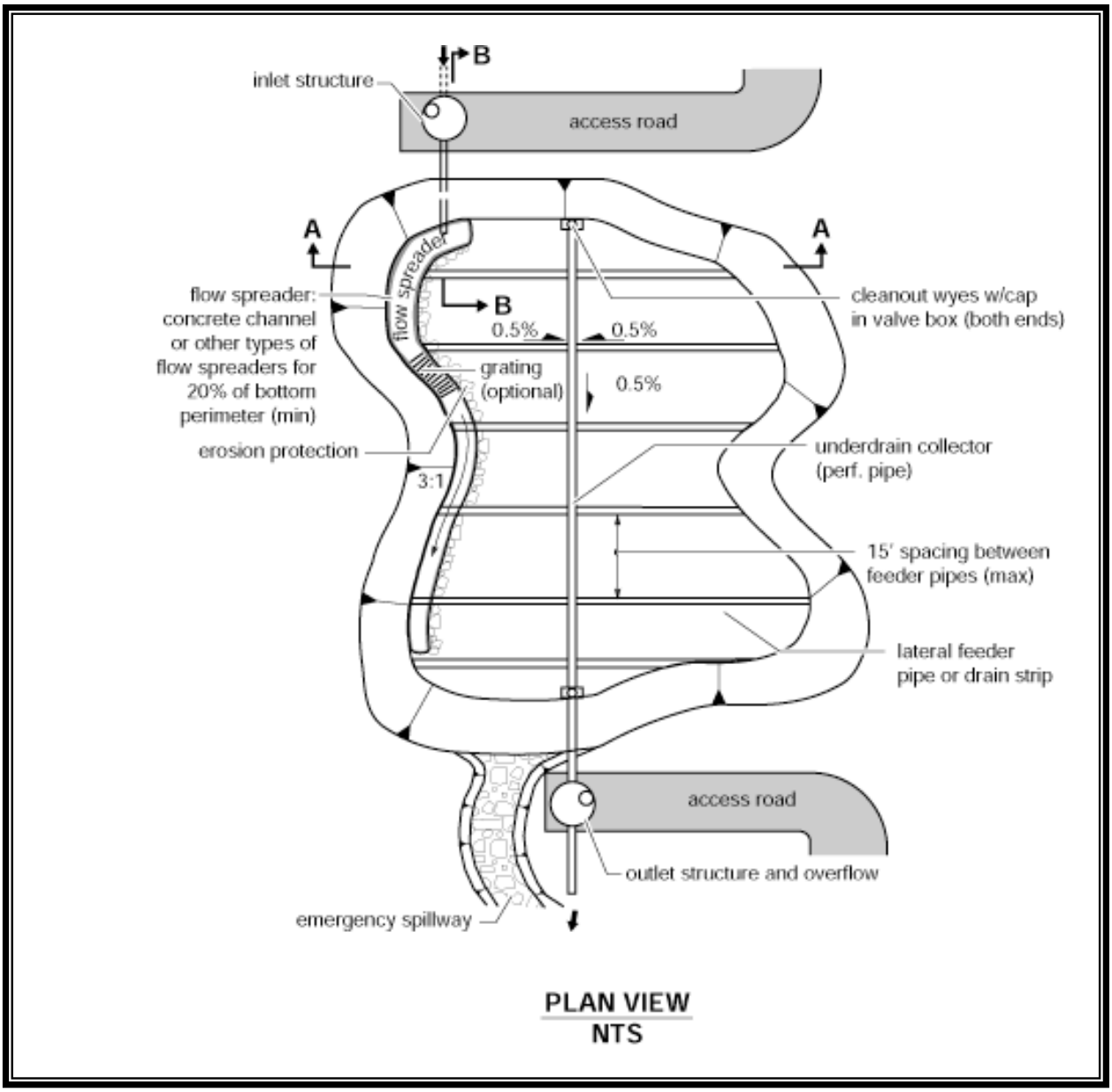


**Figure 7.2a. Sand Filter Basin with Level Spreader.**

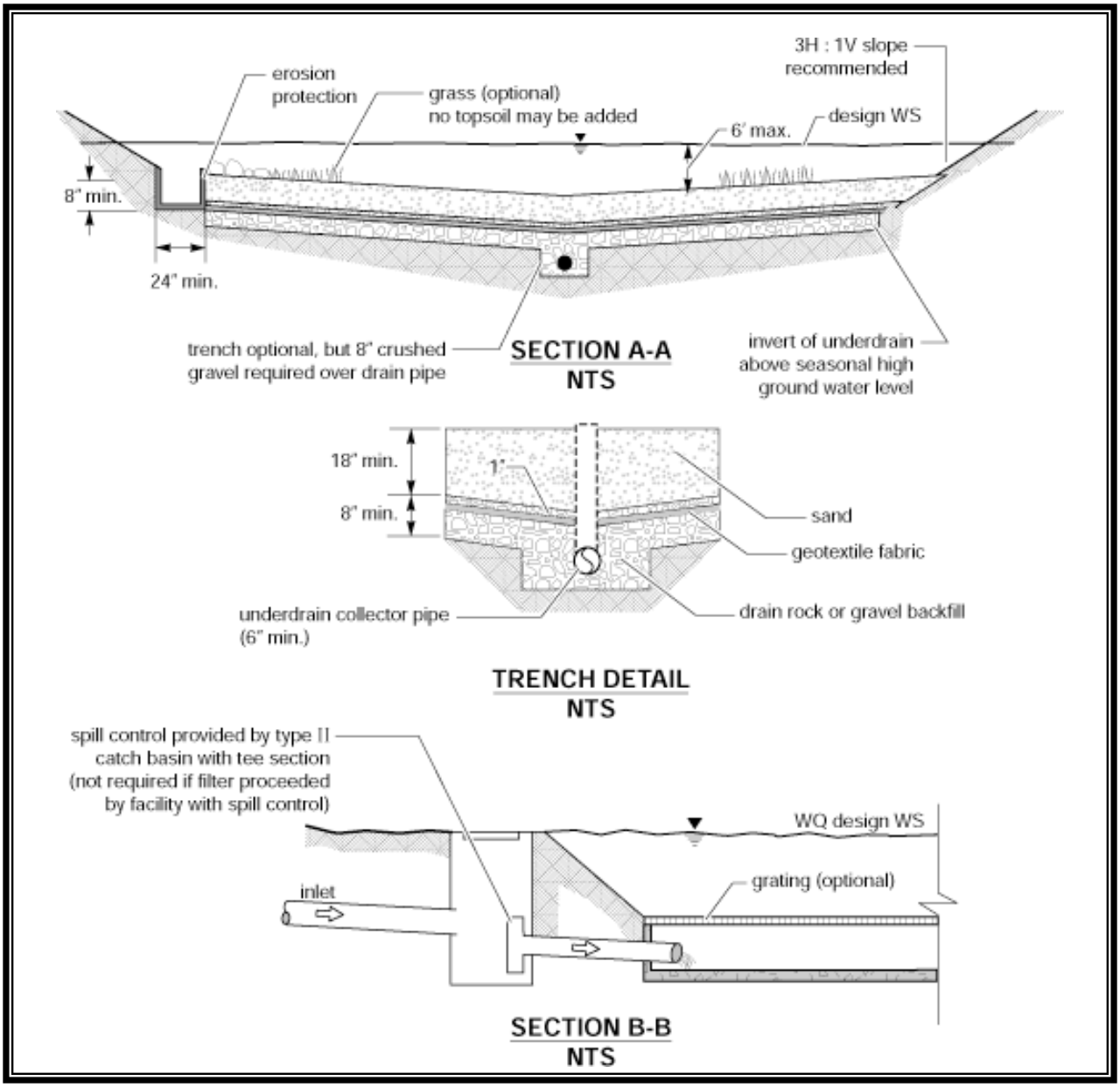


**Figure 7.2b. Sand Filter Basin with Level Spreader (cont).**

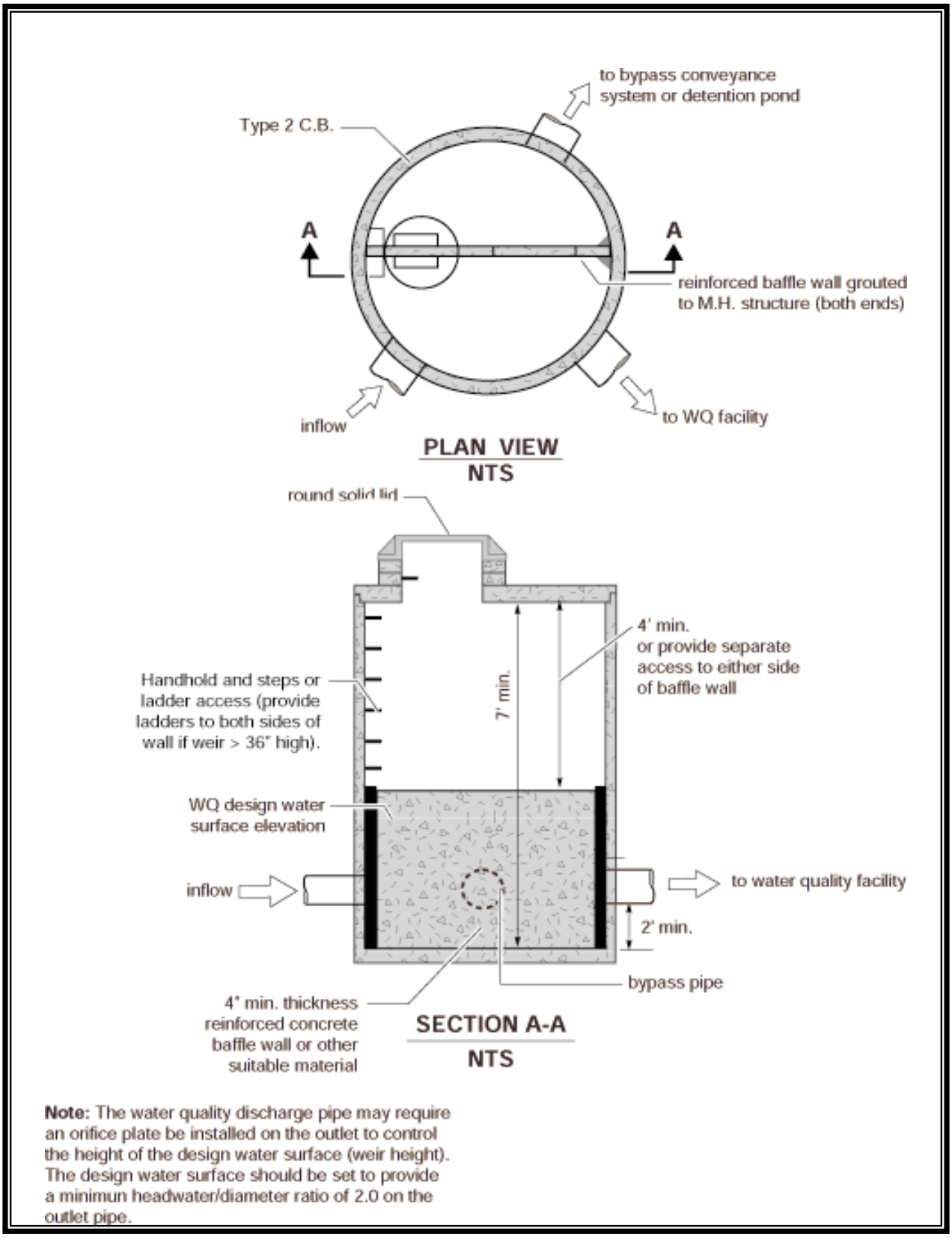


**Figure 7.3a. Flow Splitter Option A.**

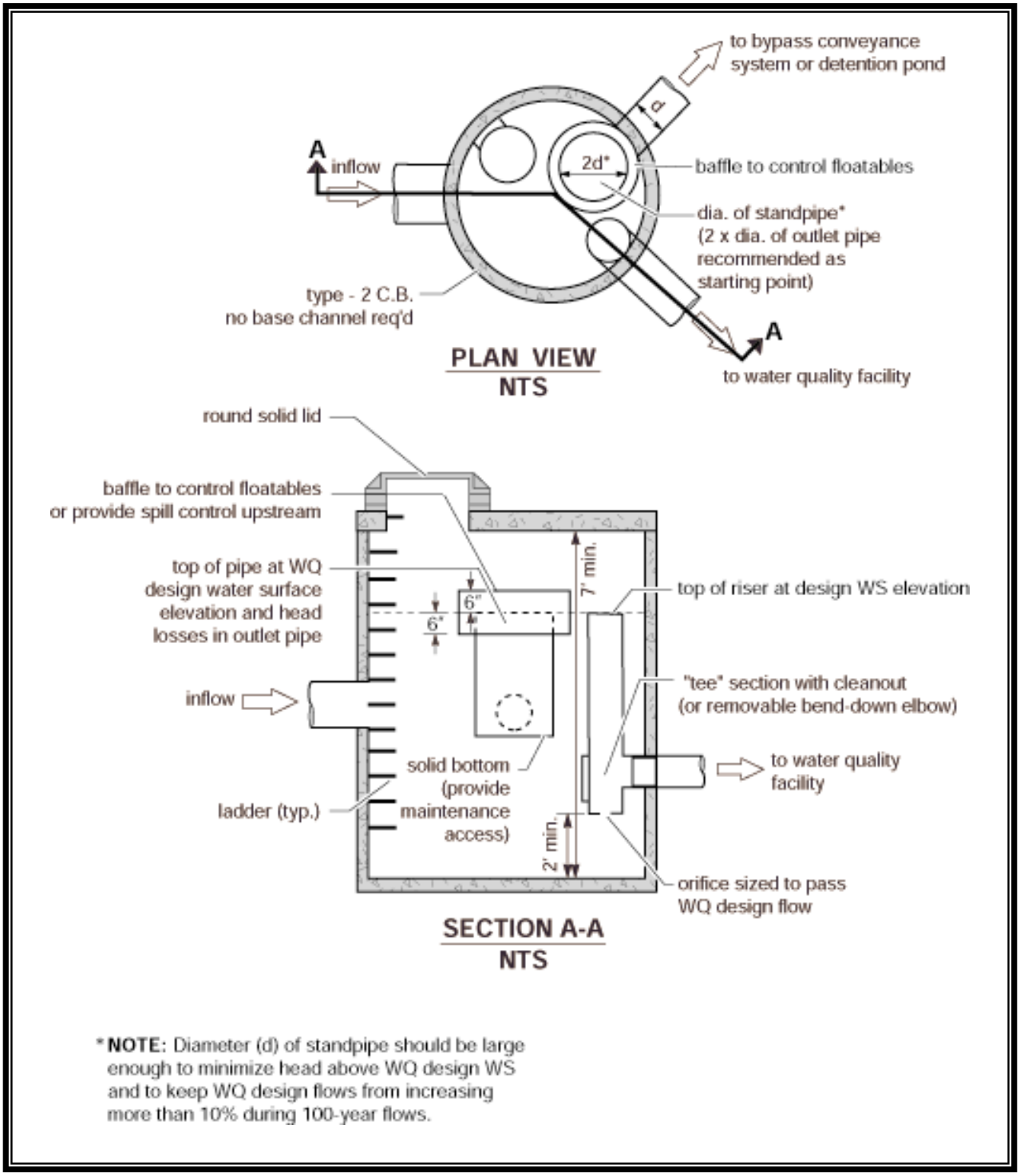


**Figure 7.3b. Flow Splitter Option B.**

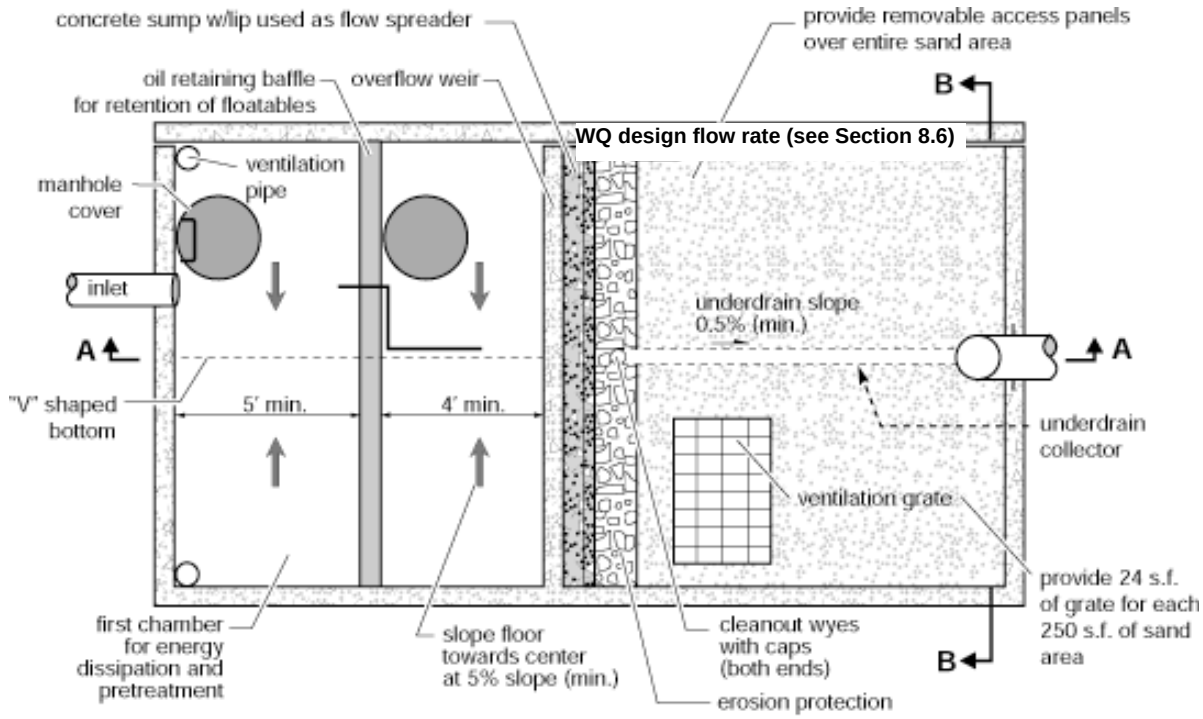


Source: City of Austin

**Figure 7.4a. Sand Filter Vault.**

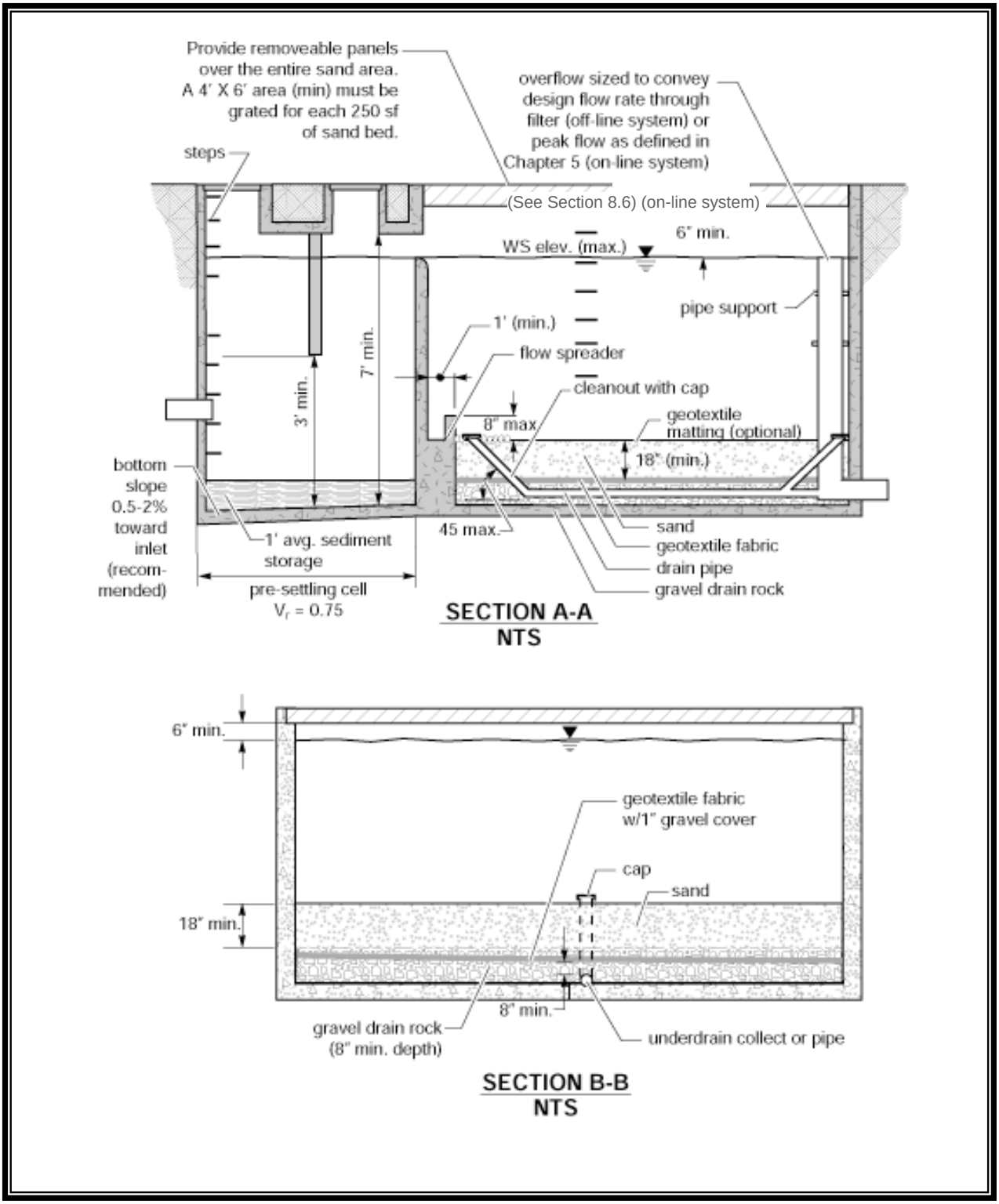


**Figure 7.4b. Sand Filter Vault (cont).**

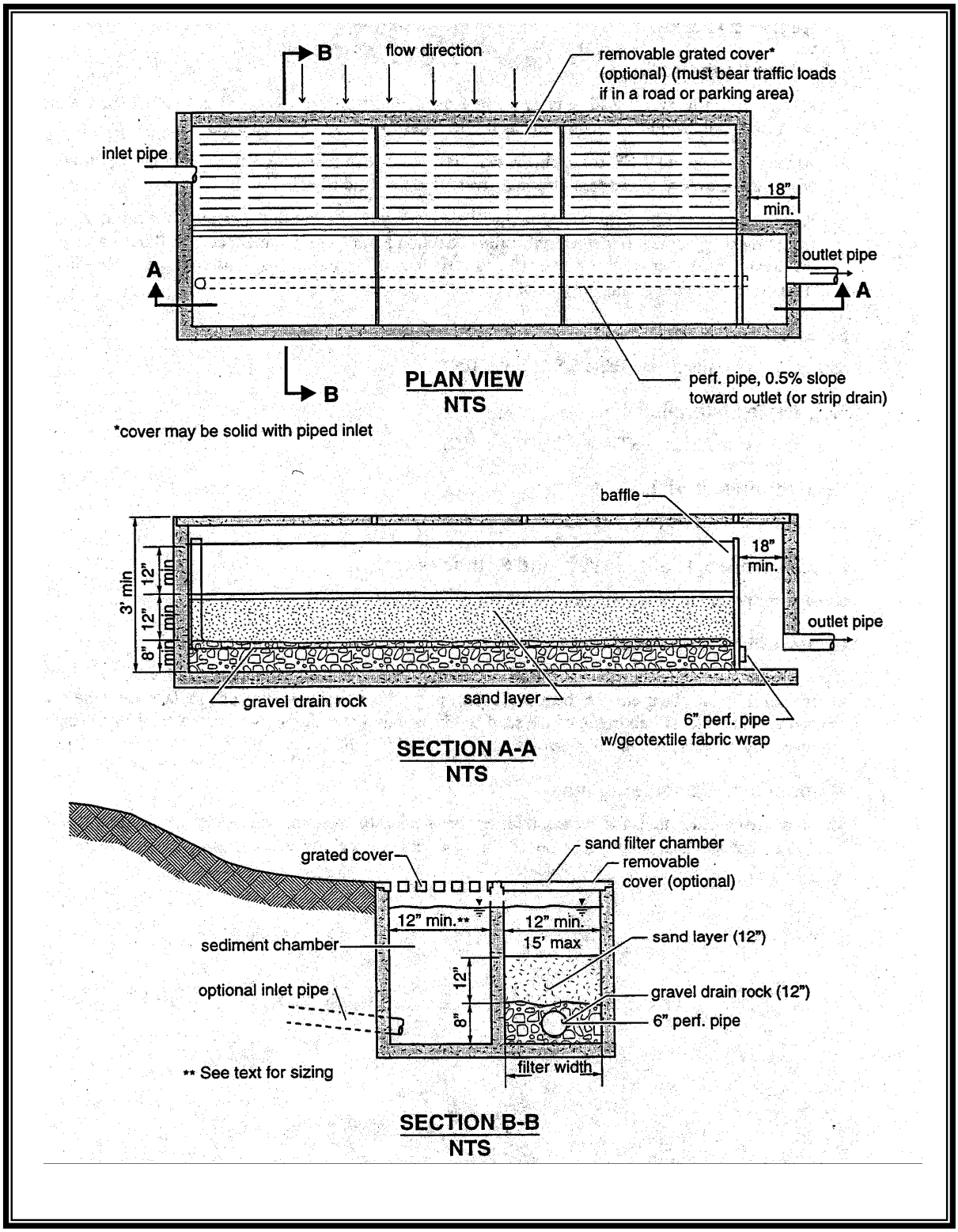


**Figure 7.5. Linear Sand Filter.**

- 80 percent total suspended solids at influent Event Mean Concentrations (EMCs) of 30 to 300 mg/L (King County, 1998) (Chang, 2000)
- Oil and grease to below 10 mg/L daily average and 15 mg/L at any time, with no ongoing or recurring visible sheen in the discharge.

As outlined in Chapter 3, sand filters can also be amended to provide enhanced treatment. At the time this volume was written, processed steel fiber and crushed calcitic limestone are the only sand filter amendments for which data is available that documents increased dissolved metals removal (the target of enhanced treatment). Use of amended sand filters requires prior city approval.

**Large sand filter:** Large sand filters are expected to remove at least 50 percent of the total phosphorous compounds (as TP) by collecting and treating 95 percent of the runoff volume (ASCE and WEF, 1998).

## 7.4 Applications and Limitations

Sand filtration can be used in most residential, commercial, and industrial developments where debris, heavy sediment loads, and oils and greases will not clog or prematurely overload the sand, or where adequate pretreatment is provided for these pollutants. Specific applications include residential subdivisions, parking lots for commercial and industrial establishments, gas stations, high-use sites, high-density multifamily housing, roadways, and bridge decks.

Sand filters should be located off-line before or after detention (Chang, 2000). Sand filters are also suited for locations with space constraints in retrofit and new/redevelopment situations. Overflow or bypass structures must be carefully designed to handle the larger storms. An off-line system is sized to treat 91 percent runoff volume predicted by a continuous runoff model. If a project must comply with Minimum Requirement #7: Flow Control, the flows bypassing the filter and the filter discharge must be routed to a retention/detention facility.

Pretreatment is necessary to reduce velocities to the sand filter and remove debris, floatables, large particulate matter, and oils. In high water table areas adequate drainage of the sand filter may require additional engineering analysis and design considerations. An underground filter should be considered in areas subject to freezing conditions (Urbonas, 1997).

## 7.5 Site Suitability

**The following site characteristics should be considered in siting a sand filtration system:**

- Space availability, including a presettling basin
- Sufficient hydraulic head from inlet to outlet
- Adequate Operation and Maintenance capability including accessibility for O&M
- Sufficient pretreatment of oil, debris and solids in the tributary runoff.

## 7.6 Design Requirements

Sand filters must capture and treat the Water Quality Design Storm volume which is 91 percent of the total runoff volume (95 percent for large sand filter) as predicted by an approved, equivalent continuous runoff model. Only 9 percent of the total runoff volume (5 percent for large sand filter) would bypass or overflow from the sand filter facility. Off-line sand filters can be located either upstream or downstream of detention facilities. On-line sand filters should only be located downstream of detention to prevent exposure of the sand filter surface to high flow rates that could cause loss of media and previously removed pollutants. **Additional design criteria specific to each sand filter BMP are provided at the end of this chapter. The criteria outlined under the Sand Filter Basin (BMP T7.10) apply to all sand filter BMPs, unless otherwise noted under the subsequent BMP descriptions for Sand Filter Vaults (BMP T7.20) and Linear Sand Filters (BMP T7.30).**

### 7.6.1 Sand Filter Sizing Procedure

The following design criteria apply to all sand filter BMPs, unless otherwise noted under the subsequent BMP descriptions for sand filter vaults and linear sand filters.

General facility sizing methods are provided below, followed by design criteria to be used when designing a sand filter with an approved continuous runoff model.

#### *General Design Method*

Whether performing the sand filter design manually, or with an approved model, either method is based on Darcy's law for modeling flow through a porous media like sand or soil:

$$Q = KiA$$

Where:

Q = water quality design flow (cfs)
K = hydraulic conductivity of the media (fps)

A = surface area perpendicular to the direction of flow (sf)
i = hydraulic gradient (ft/ft) for a constant head and constant media depth

$$i = \frac{h + L}{L}$$

and:

*h* = average depth of water above the filter (ft), defined as d/2
d = maximum water storage depth above the filter surface (ft)
*L* = thickness of sand media (ft).

Darcy's law underlies both the manual and the modeling design methods. V, or more correctly, 1/V, is the direct input in the sand filter design. The relationship between V and K is revealed by equating Darcy's law and the equation of continuity, Q = VA. (Note: When water is flowing into the ground, V is commonly called the filtration rate. It is ordinarily measured via a soil infiltration test.)

Specifically:

$Q = KiA$ and $Q = VA$ so,

$VA = KiA$ or $V = Ki$

Note that $V \neq K$. The filtration rate is not the same as the hydraulic conductivity, but they do have the same units (distance per time). K can be equated to V by dividing V by the hydraulic gradient i, which is defined above. The hydraulic conductivity K does not change with head nor is it dependent on the thickness of the media, only on the characteristics of the media and the fluid. The hydraulic conductivity of 1 inch per hour ($2.315 \times 10^{-5}$ fps) specified for sand filter design is based on bench-scale tests of conditioned rather than clean sand. This design hydraulic conductivity represents the average sand bed condition as silt is captured and held in the filter bed. Unlike the hydraulic conductivity, the filtration rate V changes with head and media thickness, although the media thickness is constant in the sand filter design. Table 7.1 shows values of V for different water depths d (d=2h).

**Table 7.1. Sand Filter Design Parameters.**

| | Sand Filter Design Parameters | | | | | |
|---|---|---|---|---|---|---|
| Facility ponding depth d (ft) | 1 | 2 | 3 | 4 | 5 | 6 |
| Filtration rate V (in/hr) [a] | 1.33 | 1.67 | 2.00 | 2.33 | 2.67 | 3.00 |
| 1/V (min/in) | 45 | 36 | 30 | 26 | 22.5 | 20 |

[a] The filtration rate is not used directly, but is provided for information. V equals the hydraulic conductivity, K, times the hydraulic gradient, i. The hydraulic conductivity used is 1 inch/hr. The hydraulic gradient = (h + L)/L, where h = d/2 and L = the sand depth (1.5 ft).

### *Modeling Method*

When using continuous modeling to size a sand filter, apply the assumptions listed in Table 7.2. Several available modeling programs include built-in modules to size sand filters.

**Table 7.2. Sand Filter Design and Sizing Criteria.**

| Variable | Assumption |
|---|---|
| Precipitation Series | Gig Harbor extended precipitation time series |
| Computational Time Step | 15-minutes |
| Inflows to Facility | Model output for water quality design |
| Ponding Depth | Maximum water depth over the filter media |
| Precipitation Applied to Facility | Checked (always activated when sizing above ground sand filters) |
| Evaporation Applied to Facility | Checked (always activated when sizing above ground sand filters) |
| Media depth | 18 inches or other as designed |
| Infiltration Reduction Factor | Inverse of safety factor (i.e., safety factor of 2 is a reduction factor of 0.5). Safety factors for infiltration rates are discussed in Volume III, Appendix III-A. |
| Sand Media Hydraulic Conductivity | 1 inch per hour |
| Use Wetted Surface Area | Only if side slopes are 3:1 or flatter |

## 7.7 Construction Criteria

Until all project improvements are completed which produce surface runoff and all exposed ground surfaces are stabilized by revegetation or landscaping, sand filtration systems may not be operated, and no surface runoff may be permitted to enter the system. Construction runoff may be routed to a pretreatment sedimentation facility, but discharge from sedimentation facilities should by-pass downstream sand filters. Careful level placement of the sand is necessary to avoid formation of voids within the sand that could lead to short-circuiting (particularly around penetrations for underdrain cleanouts), and to prevent damage to the underlying geomembranes and underdrain system. Over-compaction should be avoided to ensure adequate filtration capacity. Sand is best placed with a low ground pressure bulldozer (4 psig or less). After the sand layer is placed water settling is recommended. Flood the sand with 10 to 15 gallons of water per cubic foot of sand.

## 7.8 Best Management Practices

### BMP T7.10 Sand Filter Basin

The following design requirements apply to all sand filter BMPs, unless otherwise noted under the subsequent descriptions for Sand Filter Vaults (BMP T7.20) and Linear Sand Filters (BMP T7.30).

#### *Basic and Large Sand Filters:*

A summary of the basic sand filter design requirements are given below.

- ***On-line*** sand filters must NOT be placed ***upstream*** of a detention facility. This is to prevent exposure of the sand filter surface to high flow rates that could cause loss of media and previously removed pollutants.

- ***On-line*** sand filters placed ***downstream*** of a detention facility must be sized to filter 91 percent of the runoff volume (95 percent for large sand filter).

- ***Off-line*** sand filters placed ***upstream*** of a detention facility must have a flow splitter designed to send all flows at or below the 15-minute water quality flow rate, as predicted by an approved continuous runoff model, to the sand filter. The sand filter must be sized to filter all the runoff sent to it (no overflows from the treatment facility should occur). Note that WWHM allows any bypasses and the runoff filtered through the sand to be directed to the downstream detention facility.

- ***Off-line*** sand filters placed ***downstream*** of a detention facility must have a flow splitter designed to send all flows at or below the 2-year recurrence interval flow from the detention pond, as predicted by an approved continuous runoff model, to the treatment facility. The treatment facility must be sized to filter all the runoff sent to it (no overflows from the treatment facility should occur).

Note: An overflow should be included in the design of the basic and large sand filter basin. The overflow height should be at the maximum hydraulic head of the pond above the sand bed.

#### *Additional Design Criteria for Basic and Large Sand Filters:*

- Runoff to be treated by the sand filter must be pretreated (e.g., presettling basin, etc. depending on pollutants) to remove debris and other solids, and oil from high-use sites.

- Inlet bypass and flow spreading structures (e.g., flow spreaders, weirs or multiple orifice openings) should be designed to capture the applicable design flow rate, minimize turbulence and to spread the flow uniformly across the surface of the sand filter. Stone riprap or other energy dissipation devices should be installed to prevent gouging of the sand medium and to promote uniform flow. Include emergency spillway or overflow structures (see Volume III).

- The following are design criteria for the underdrain piping: *(types of underdrains include: a central collector pipe with lateral feeder pipes, or, a geotextile drain strip in an 8-inch gravel backfill or drain rock bed, or, longitudinal pipes in an 8-inch gravel backfill or drain rock with a collector pipe at the outlet end.)*

    - Upstream of detention underdrain piping should be sized to handle double the 2-year recurrence interval flow indicated by an approved continuous runoff model (the doubling factor is a safety factor used in the absence of a conversion factor from the 1-hour time step to a 15-minute time step). Downstream of detention the underdrain piping should be sized for the 2-year recurrence interval flow indicated by an approved continuous runoff model. In both instances there should be at least 1 foot of hydraulic head above the invert of the upstream end of the collector pipe (King County, 1998).

    - Internal diameters of underdrain pipes should be a minimum of 6 inches and two rows of three-eighth-inch holes spaced 6 inches apart longitudinally (maximum), with rows 120 degrees apart (laid with holes downward). Maximum perpendicular distance between two feeder pipes must be 10 feet. All piping is to be schedule 80 PVC or greater wall thickness. Drain piping could be installed in basin and trench configurations.

    - Main collector underdrain pipe should be at a slope of 1 percent minimum.

    - A geotextile fabric (specifications in Appendix V-A) must be used between the sand layer and drain rock or gravel and placed so that 2 inches of drain rock/gravel is above the fabric. Drain rock should be 0.75 to 1.5 inch rock or gravel backfill, washed free of clay and organic material.

  Cleanout wyes with caps or junction boxes must be provided at both ends of the collector pipes. Cleanouts must extend to the surface of the filter. A valve box must be provided for access to

the cleanouts. Access for cleaning all underdrain piping should be provided. This may consist of installing cleanout ports, which tee into the underdrain system and surface above the top of the sand bed.

**Note:** Other equivalent energy dissipaters can be used if needed.

- Sand specification: Sand bed depth shall be a minimum of 18 inches. The sand in a filter must consist of a medium sand meeting the size gradation (by weight) given in Table 7.3 below. The contractor must obtain a grain size analysis from the supplier to certify that the No. 100 and No. 200 sieve requirements are met. *(Note: Standard backfill for sand drains, Wa. Std. Spec. 9-03.13, does not meet this specification and should not be used for sand filters.)*

**Table 7.3. Sand Medium Specification.**

| U.S. Sieve Number | Percent Passing |
|---|---|
| 4 | 100 |
| 8 | 70-100 |
| 16 | 40-90 |
| 30 | 25-75 |
| 50 | 2-25 |
| 100 | <4 |
| 200 | <2 |

- Impermeable Liners for Sand Bed Bottom:
  - Impermeable liners are required where the underflow could cause problems with structures. If an impermeable liner is not provided, then an analysis must be provided identifying possible adverse effects of seepage zones on groundwater, and near building foundations, basements, roads, parking lots and sloping sites. Sand filters without impermeable liners should not be built on fill sites and should be located at least 20 feet downslope and 100 feet upslope from building foundations.
  - Impermeable liners may be clay, concrete, or geomembrane. Clay liners should have a minimum thickness of 12 inches and meet the specifications given in Table 7.4. If a geomembrane liner is used it must have a minimum thickness of 30 mils and be ultraviolet resistant. The geomembrane liner must be protected from puncture, tearing, and abrasion by installing geotextile fabric on the top and bottom of the geomembrane.

**Table 7.4. Clay Liner Specifications.**

| Property | Test Method | Unit | Specification |
|---|---|---|---|
| Permeability | ASTM D-2434 | cm/sec | $1 \times 10^{-6}$ max. |
| Plasticity Index of Clay | ASTM D-423 and D-424 | percent | Not less than 15 |
| Liquid Limit of Clay | ASTM D-2216 | percent | Not less than 30 |
| Clay Particles Passing | ASTM D-422 | percent | Not less than 30 |
| Clay Compaction | ASTM D-2216 | percent | 95 percent of Standard Proctor Density |

Source: City of Austin, 1988

- Concrete liners may also be used for sedimentation chambers and for sedimentation and sand filtration basins less than 1,000 square feet in area. Concrete must be 5 inches thick Class A or better and should be reinforced by steel wire mesh. The steel wire mesh must be 6 gauge wire or larger and 6-inch by 6-inch mesh or smaller. An "Ordinary Surface Finish" is required. When the underlying soil is clay or has an unconfined compressive strength of 0.25 ton per square foot or less, the concrete must have a minimum 6-inch compacted aggregate base. This base must consist of coarse sand and river stone, crushed stone or equivalent with diameter of 0.75 to 1 inch.

- If an impermeable liner is not required then a geotextile fabric liner must be installed that retains the sand and meets the specifications listed in Appendix V-A, unless the basin has been excavated to bedrock.

- Include an access ramp with a slope not to exceed 7:1, or equivalent, for maintenance purposes at the inlet and the outlet of a surface filter. Consider an access port for inspection and maintenance.

- Side slopes for earthen/grass embankments must not exceed 3:1 to facilitate mowing.

- High groundwater may damage underground structures or affect the performance of filter underdrain systems. There must be sufficient clearance (at least 2 feet) between the seasonal high groundwater level and the bottom of the sand filter to obtain adequate drainage.

## BMP T7.20 Sand Filter Vault

A sand filter vault (see Figures 7.4a and 7.4b) is similar to an open sand filter except that the sand layer and underdrains are installed below grade in a vault. It consists of presettling and sand filtration cells.

### *Applications and Limitations*

- Use where space limitations preclude aboveground facilities
- Not suitable where high water table and heavy sediment loads are expected
- An elevation difference of 4 feet between inlet and outlet is needed to allow sufficient hydraulic head for water to pass through the filter.

### *Additional Design Criteria for Vaults*

- Vaults may be designed as off-line systems or on-line for small drainages
- In an off-line system a diversion structure should be installed to divert the design flow rate into the sediment chamber and bypass the remaining flow to detention/retention (if necessary to meet Minimum Requirement #7), or to surface water.
- Optimize sand inlet flow distribution with minimal sand bed disturbance. A maximum of 8-inch distance between the top of the spreader and the top of the sand bed is suggested. Flows may enter the sand bed by spilling over the top of the wall into a flow spreader pad or alternatively a pipe and manifold system may be used. Any pipe and manifold system must retain the required dead storage volume in the first cell, minimize turbulence, and be readily maintainable.
- If an inlet pipe and manifold system is used, the minimum pipe size should be 8 inches. Multiple inlets are recommended to minimize turbulence and reduce local flow velocities.
- Erosion protection must be provided along the first foot of the sand bed adjacent to the spreader. Geotextile fabric secured on the surface of the sand bed, or equivalent method, may be used.
- The filter bed should consist of a sand top layer, and a geotextile fabric second layer with an underdrain system.

- Design the presettling cell for sediment collection and removal. A V-shaped bottom, removable bottom panels, or equivalent sludge handling system should be used. One foot of sediment storage in the presettling cell must be provided.

- The presettling chamber must be sealed to trap oil and trash. This chamber is usually connected to the sand filtration chamber through an invert elbow to protect the filter surface from oil and trash.

- If a retaining baffle is necessary for oil/floatables in the presettling cell, it must extend at least one foot above to one foot below the design flow water level. Provision for the passage of flows in the event of plugging must be provided. Access opening and ladder must be provided on both sides of the baffle.

- To prevent anoxic conditions, a minimum of 24 square feet of ventilation grate should be provided for each 250 square feet of sand bed surface area. For sufficient distribution of airflow across the sand bed, grates may be located in one area if the sand filter is small, but placement at each end is preferred. Small grates may also be dispersed over the entire sand bed area.

- Provision for access is the same as for wet vaults. Removable panels must be provided over the entire sand bed.

- Sand filter vaults must conform to the materials and structural suitability criteria specified for wet vaults.

- Provide a sand filter inlet shutoff/bypass valve for maintenance

- A geotextile fabric over the entire sand bed may be installed that is flexible, highly permeable, three-dimensional matrix, and adequately secured. This is useful in trapping trash and litter.

## BMP T7.30 Linear Sand Filter

Linear sand filters (see Figure 7.5) are typically long, shallow, two-celled, rectangular vaults. The first cell is designed for settling coarse particles, and the second cell contains the sand bed. Stormwater flows into the second cell via a weir section that also functions as a flow spreader.

### *Application and Limitations*

- Applicable in long narrow spaces such as the perimeter of a paved surface.
- As a part of a treatment train as downstream of a filter strip, upstream of an infiltration system, or upstream of a wet pond or a biofilter for oil control.
- To treat small drainages (less than 2 acres of impervious area).
- To treat runoff from high-use sites for total suspended solids and oil/grease removal, if applicable.

### *Additional Design Criteria for Linear Sand Filters*

- The two cells should be divided by a divider wall that is level and extends a minimum of 12 inches above the sand bed.
- Stormwater may enter the sediment cell by sheet flow or a piped inlet.
- The width of the sand cell must be 1 foot minimum to 15 feet maximum.
- The sand filter bed must be a minimum of 12 inches deep and have an 8-inch layer of drain rock with perforated drainpipe beneath the sand layer.
- The drainpipe must be 6-inch diameter minimum and be wrapped in geotextile and sloped a minimum of 0.5 percent.
- Maximum sand bed ponding depth: 1 foot.
- Must be vented as for sand filter vaults
- Linear sand filters must conform to the materials and structural suitability criteria specified for wet vaults.
- Set sediment cell width as follows:

| | | | | |
|---|---|---|---|---|
| Sand filter width, (w) inches | 12-24 | 24-48 | 48-72 | 72+ |
| Sediment cell width, inches | 12 | 18 | 24 | w/3 |

# Chapter 8 - Biofiltration Treatment Facilities

*Note: Figures in Chapter 8 are courtesy of King County, except as noted.*

This chapter addresses five BMPs that are classified as biofiltration treatment facilities:

Biofilters are vegetated treatment systems (typically grass) that remove pollutants by means of sedimentation, filtration, soil sorption, and/or plant uptake. They are typically configured as swales or flat filter strips.

## 8.1 Purpose

The BMPs discussed in this chapter are designed to remove low concentrations and quantities of total suspended solids, heavy metals, petroleum hydrocarbons, and/or nutrients from stormwater.

## 8.2 Applications

A biofilter can be used as a basic treatment BMP for contaminated stormwater runoff from roadways, driveways, parking lots, and highly impervious ultra-urban areas or as the first stage of a treatment train. In cases where hydrocarbons, high total suspended solids, or debris would be present in the runoff, such as high-use sites, a pretreatment system for those components would be necessary. Off-line location is preferred to avoid flattening vegetation and the erosive effects of high flows. Biofilters should be considered in retrofit situations where appropriate (Center for Watershed Protection, 1998).

## 8.3 Site Suitability

**The following factors must be considered for determining site suitability:**

- Target pollutants are amenable to biofilter treatment
- Accessibility for Operation and Maintenance
- Suitable growth environment; (soil, etc.) for the vegetation
- Adequate siting for a pretreatment facility if high petroleum hydrocarbon levels (oil/grease) or high total suspended solids loads could impair treatment capacity or efficiency
- If the biofilter can be impacted by snowmelts and ice, refer to Caraco and Claytor for additional design criteria (USEPA, 1997).

## 8.4 Best Management Practices

This chapter presents the following biofiltration treatment BMPs:

- BMP T8.10 – Basic Biofiltration Swale
- BMP T8.20 – Wet Biofiltration Swale
- BMP T8.30 – Continuous Inflow Biofiltration Swale
- BMP T8.40 – Basic Filter Strip and Compost-Amended Filter Strip
- BMP T8.50 – Narrow Area Filter Strip.

## BMP T8.10 Basic Biofiltration Swale

Biofiltration swales are typically shaped as a trapezoid or a parabola. See Attachments Section B, Detail 2.0 for typical cross sections.

### *Limitations*

Data suggest that the performance of biofiltration swales is highly variable from storm to storm. It is therefore recommended that treatment methods providing more consistent performance, such as sand filters and wet ponds, be considered first. Swales downstream of devices of equal or greater effectiveness can convey runoff but should not be expected to offer a treatment benefit (Horner, 2000).

### *Design Criteria*

- *Design criteria are specified in Table 8.1*. A 9-minute hydraulic residence time is used at a multiple of the peak 15-minute Water Quality Design Flow Rate (Q) representing 91 percent runoff volume as determined by an approved continuous runoff model (see Volume I).

- Biofiltration swales should be designed as off-line facilities where feasible. For on-line systems, designers must evaluate the hydraulic capacity/stability for inflows greater than design flows. Bypass high flows, or control release rates into the biofilter, if necessary. When designing a swale to be off-line, the stability check is not required.

- Use a wide radius curved path to gain length where land is not adequate for a linear swale (avoid sharp bends to reduce erosion or provide for erosion protection).

- Install level spreaders (minimum 1 inch gravel) at the head and every 50 feet in swales of ≥4 feet width. Include sediment cleanouts (weir, settling basin, or equivalent) at the head of the biofilter as needed.

- Use energy dissipaters (bioengineered methods or riprap) for increased downslopes.

## Table 8.1. Sizing Criteria.

| Design parameter | BMP T 8.10-Biofiltration swale | BMP T 8.40-Filter Strip |
|---|---|---|
| Longitudinal Slope | 0.015 - 0.025[1] | 0.01 - 0.15 |
| Maximum velocity | 1 ft / sec (@ K multiplied by the water quality design flow rate); for stability, 3 ft/sec max. | 0.5 ft / sec |
| Maximum water depth[2] | 2”- if mowed frequently; 4” if mowed infrequently | 1-inch max. |
| Manning coefficient (22) | (0.2 – 0.3)[3](0.24 if mowed infrequently) | 0.35 (0.45 if compost-amended, and mowed to maintain grass height ≤ 4”) |
| Bed width (bottom) | (2 - 10 ft)[4] | --- |
| Freeboard height | 0.5 ft | --- |
| Minimum hydraulic residence time at Water Quality Design Flow Rate | 9 minutes (18 minutes for continuous inflow) | 9 minutes |
| Minimum length | 100 ft | Sufficient to achieve hydraulic residence time in the filter strip |
| Maximum sideslope | 3 H : 1 V<br>5H:1V preferred | Inlet edge ≥ 1” lower than contributing paved area |
| Max. tributary drainage flowpath | --- | 150 ft |
| Max. longitudinal slope of contributing area | --- | 0.05 (steeper than 0.05 need upslope flow spreading and energy dissipation) |
| Max. lateral slope of contributing area | --- | 0.02 (at the edge of the strip inlet) |

1. For swales, if the slope is less than 1.5 percent install an underdrain using a perforated pipe, or equivalent. Amend the soil if necessary to allow effective percolation of water to the underdrain. Install the low-flow drain 6” deep in the soil. Slopes greater than 2.5 percent need check dams (riprap) at vertical drops of 12-15 inches. Underdrains can be made of 6 inch Schedule 40 PVC perforated pipe with 6” of drain gravel on the pipe. The gravel and pipe must be enclosed by geotextile fabric (see Figures 8.1 and 8.2).
2 Below the design water depth install an erosion control blanket, at least 4” of topsoil, and the selected biofiltration mix. Above the water line use a straw mulch or sod.
3. This range of Manning’s n can be used in the equation; b = Qn/1.49y(1.67) s(0.5) – Zy with wider bottom width b, and lower depth, y, at the same flow. This provides the designer with the option of varying the bottom width of the swale depending on space limitations. Designing at the higher n within this range at the same flow decreases the hydraulic design depth, thus placing the pollutants in closer contact with the vegetation and the soil.
4. For swale widths up to 16 feet the cross-section can be divided with a berm (concrete, plastic, compacted earthfill) using a flow spreader at the inlet (Figure 8.3).

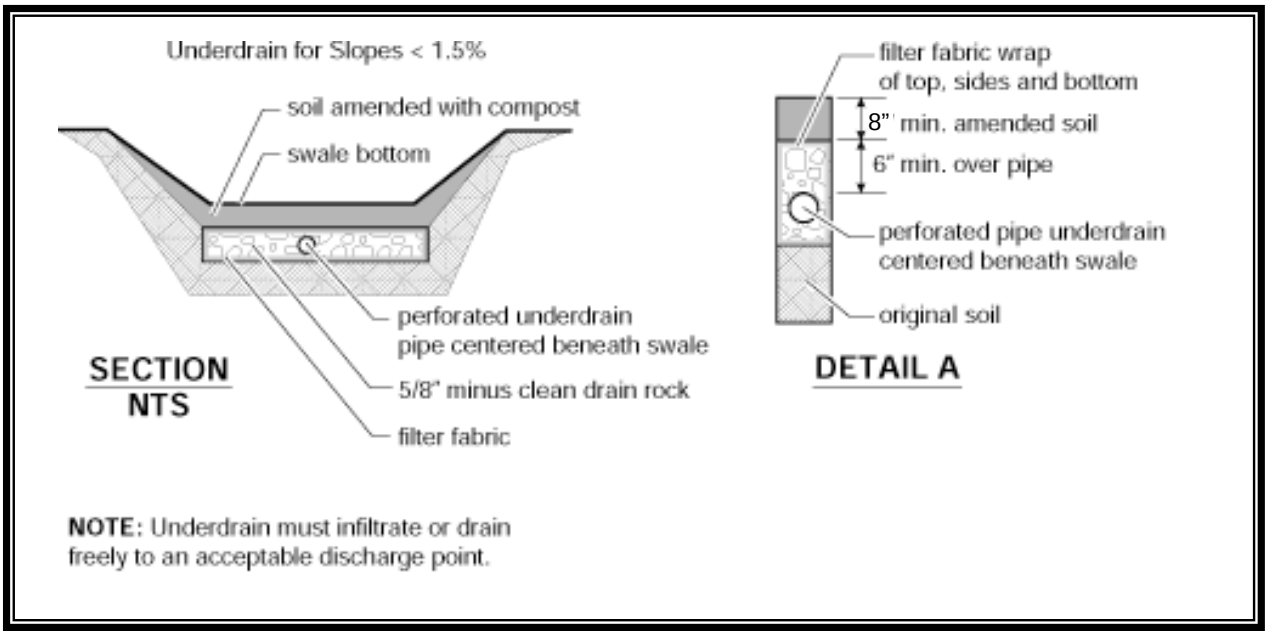


**Figure 8.1. Biofiltration Swale Underdrain Detail.**

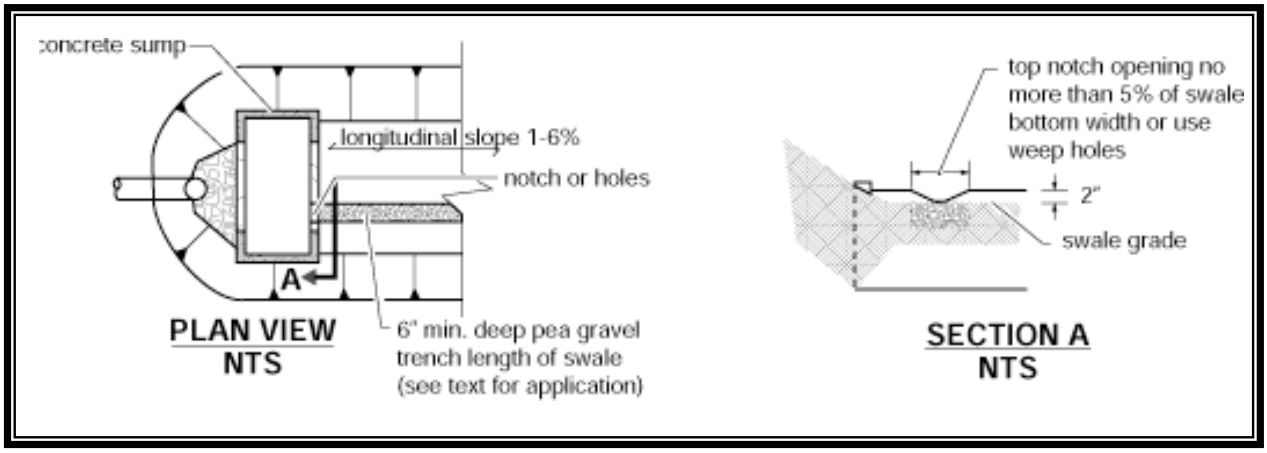


**Figure 8.2. Biofiltration Swale Low-Flow Drain Detail.**

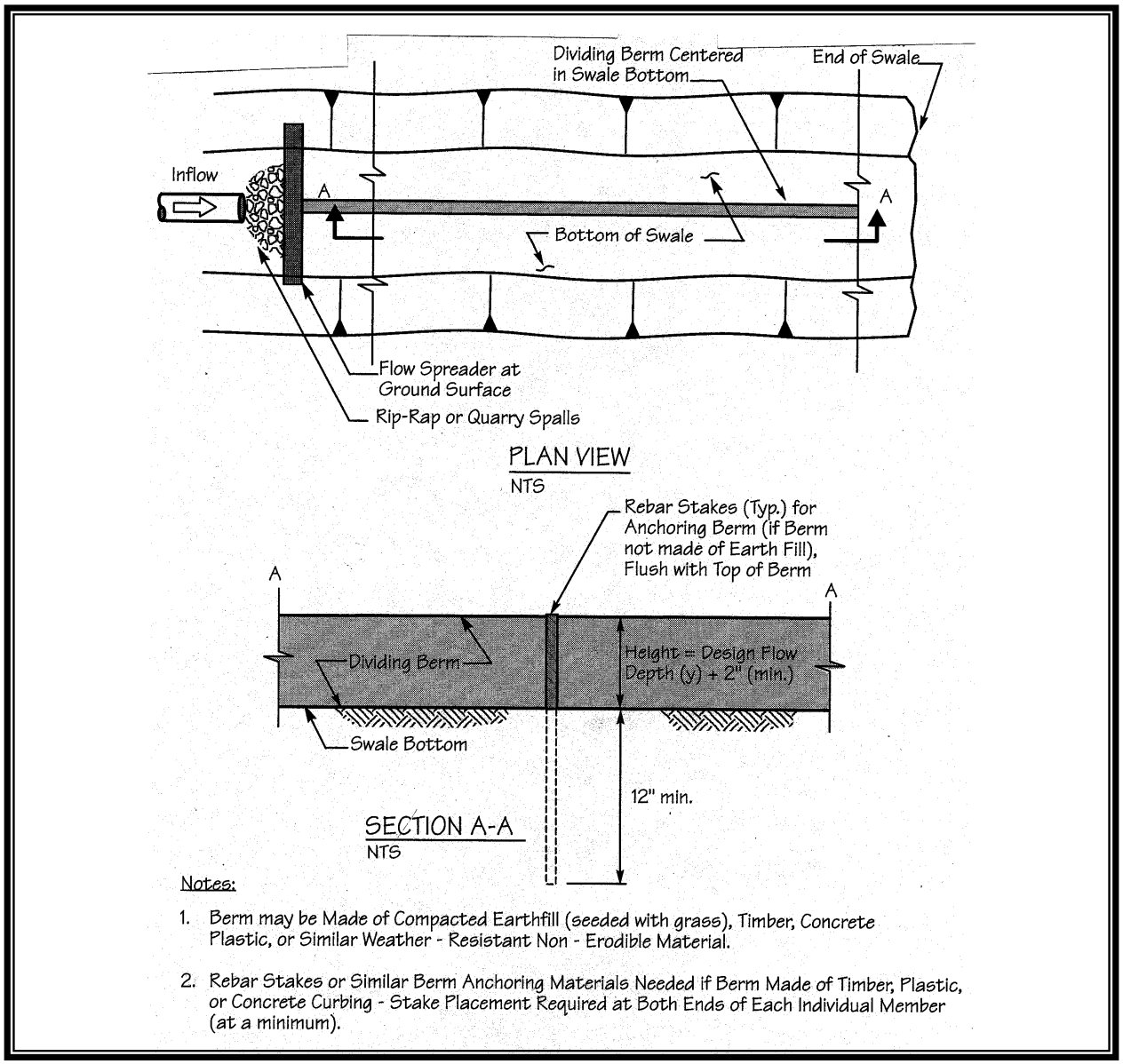


**Figure 8.3. Swale Dividing Berm.**

### *Guidance for Bypassing Off-line Facilities*

**Most biofiltration swales should be designed as off-line facilities. However, an on-line design is possible with approval by Gig Harbor.** Swales designed in an off-line mode should not engage a bypass until the flow rate exceeds a value determined by multiplying Q, the off-line water quality design flow rate predicted by an approved continuous runoff model, by the ratio determined in Figure 8.5b (presented later in this section). This modified design flow rate is an estimate of the design flow rate determined by using Santa Barbara Urban Hydrograph (SBUH) procedures. Recent biofiltration sizing recommendations (9 minutes detention at the peak design flow rate estimated by SBUH for a 6-month, 24-hour storm with a Type 1A rainfall distribution) will be maintained until more definitive information is collected concerning bioswale performance.

### *Sizing Procedure for Biofiltration Swales*

This guide provides biofilter swale design procedures in full detail, along with examples.

**Preliminary Steps (P)**

**P-1** Determine the Water Quality design flow rate (Q) in 15-minute time-steps using an approved continuous runoff model. Use the correct flow rate, off-line or on-line, for your design situation.

**P-2** Establish the longitudinal slope of the proposed biofilter.

**P-3** Select a vegetation cover suitable for the site. Refer to Tables 8.3, 8.4, and 8.5 (presented later in the text) to select vegetation for western Washington.

### *Design Calculations for Biofiltration Swale*

There are a number of ways of applying the design procedure introduced by Chow (Chow, 1959). These variations depend on the order in which steps are performed, what constants are established at the beginning of the process and which ones are calculated, and what values are assigned to the variables selected initially.

The procedure recommended here is an adaptation appropriate for biofiltration applications of the type being installed in the Puget Sound region. This procedure reverses Chow's order, designing first for capacity and then for stability. The capacity analysis emphasizes the promotion of biofiltration, rather than transporting flow with the greatest possible hydraulic efficiency. Therefore, it is based on criteria that promote sedimentation, filtration, and other pollutant removal mechanisms. Because these criteria include a lower maximum velocity than permitted

for stability, the biofilter dimensions usually do not have to be modified after a stability check.

**Design Steps (D):**

**D-1**. Select the type of vegetation, and design depth of flow (based on frequency of mowing and type of vegetation) (Table 8.1).

**D-2**. Select a value of Manning's n (Table 8.1 with footnote number three).

**D-3**. Select swale shape-typically trapezoidal or parabolic.

**D-4**. Use Manning's equation and first approximations relating hydraulic radius and dimensions for the selected swale shape to obtain a working value of a biofilter width dimension:

$$Q = \frac{1.49AR^{0.67}s^{0.5}}{n} \qquad (1)$$

$$A_{rectangle} = Ty \qquad (2)$$

$$R_{rectangle} = \frac{Ty}{T + 2y} \qquad (3)$$

Where:

Q = Water Quality Design flow rate in 15-minute time steps ($feet^3/s$, cfs)

n = Manning's n (dimensionless)

s = Longitudinal slope as a ratio of vertical rise/horizontal run (dimensionless)

A = Cross-sectional area ($feet^2$)

R = Hydraulic radius (feet)

T = top width of trapezoid or width of a rectangle (feet)

y = depth of flow (feet)

b = bottom width of trapezoid (feet)

If equations 2 and 3 are substituted into equation 1 and solved for T, complex equations result that are difficult to solve manually. However, approximate solutions can be found by recognizing that $T >> y$ and $Z^2 >> 1$, and that certain terms are nearly negligible. The approximation solutions for rectangular and trapezoidal shapes are:

$$R_{rectangle} \approx y,\ R_{trapezoid} \approx y,\ R_{parabolic} \approx 0.67y,\ R_v \approx 0.5y$$

Substitute $R_{trapezoid}$ and $A_{trapezoid} = by+Zy^2$ into Equation 1, and solve for the bottom width b (trapezoidal swale):

$$b \approx \frac{2.5Qn}{1.49y^{1.67}s^{0.5}} - Zy$$

For a trapezoid, select a side slope Z of at least 3. Compute b and then top width T, where T = b + 2yZ. *(Note: Adjustment factor of 2.5 accounts for the differential between Water Quality design flow rate and the SBUH design flow. This equation is used to estimate an initial cross-sectional area. It does not affect the overall biofiltration swale size.)*

If b for a swale is greater than 10 feet, either investigate how Q can be reduced, divide the flow by installing a low berm, or arbitrarily set b = 10 feet and continue with the analysis. For other swale shapes, refer to Figure 8.4.

**D-5.** Compute A:

$$A_{rectangle} = Ty \quad \text{or} \quad A_{trapazoid} = by + Zy^2$$

$$A_{filter\ strip} = Ty$$

**D-6.** Compute the flow velocity at design flow rate:

$$V = \kappa \frac{Q}{A}$$

K = A ratio of the peak 10-minute flow predicted by SBUH to the water quality design flow rate estimated using an approved continuous runoff model. The value of K is determined from Figure 8.5a for on-line facilities, or Figure 8.5b for off-line facilities.

If V >1.0 feet/sec (or V>0.5 feet/sec for a filter strip), repeat steps D-1 to D-6 until the condition is met. A velocity greater than 1.0 feet/sec was found to flatten grasses, thus reducing filtration. A velocity lower than this maximum value will allow a 9-minute hydraulic residence time criterion in a shorter biofilter. If the value of V suggests that a longer biofilter will be needed than space permits, investigate how Q can be reduced (e.g., use of low impact development [LID] BMPs), or increase y and/or T (up to the allowable maximum values) and repeat the analysis.

**D-7.** Compute the swale length (L, feet)

L = Vt (60 sec/min)

Where: t = hydraulic residence time (min)

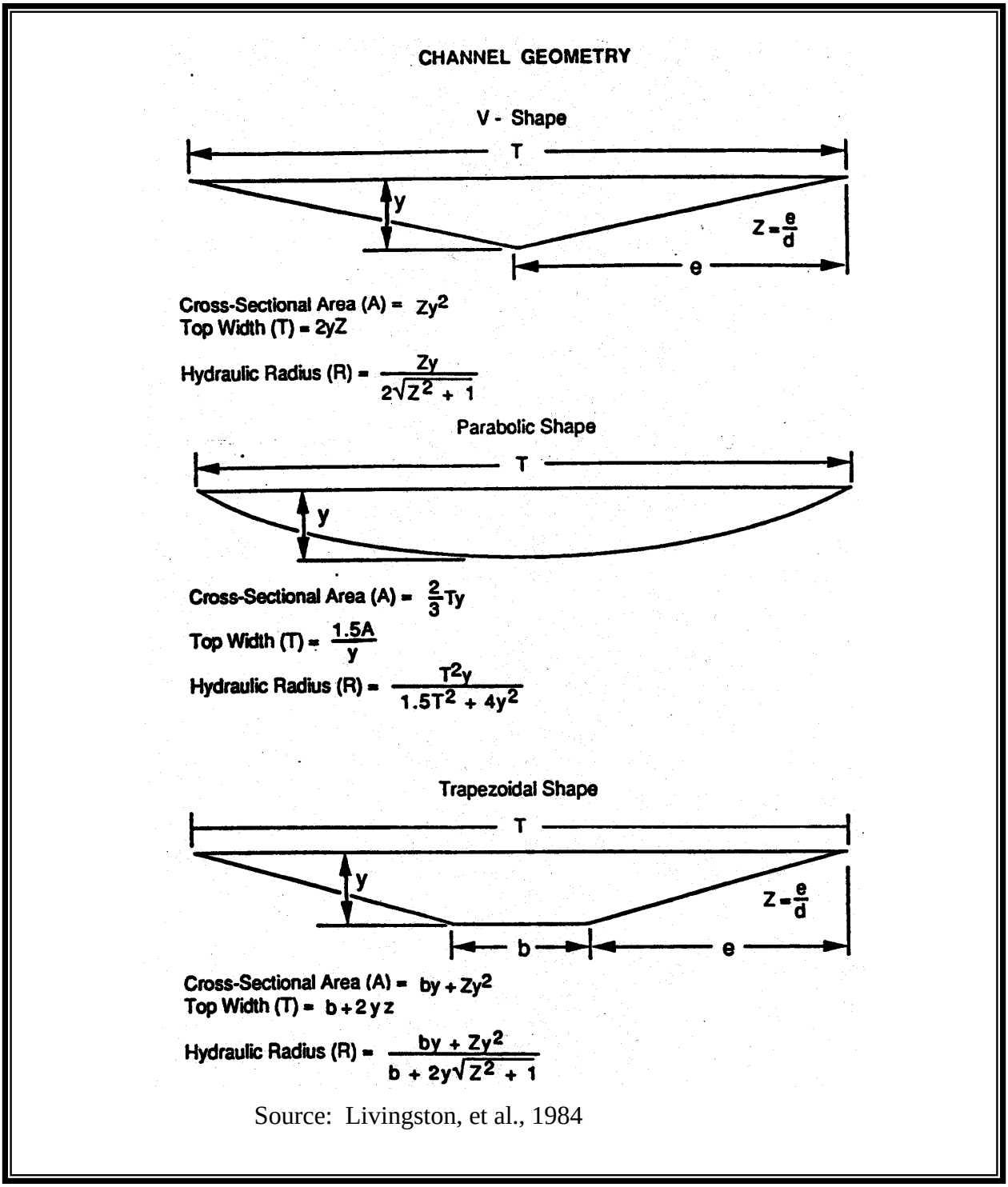


**Figure 8.4. Geometric Formulas for Common Swale Shapes.**

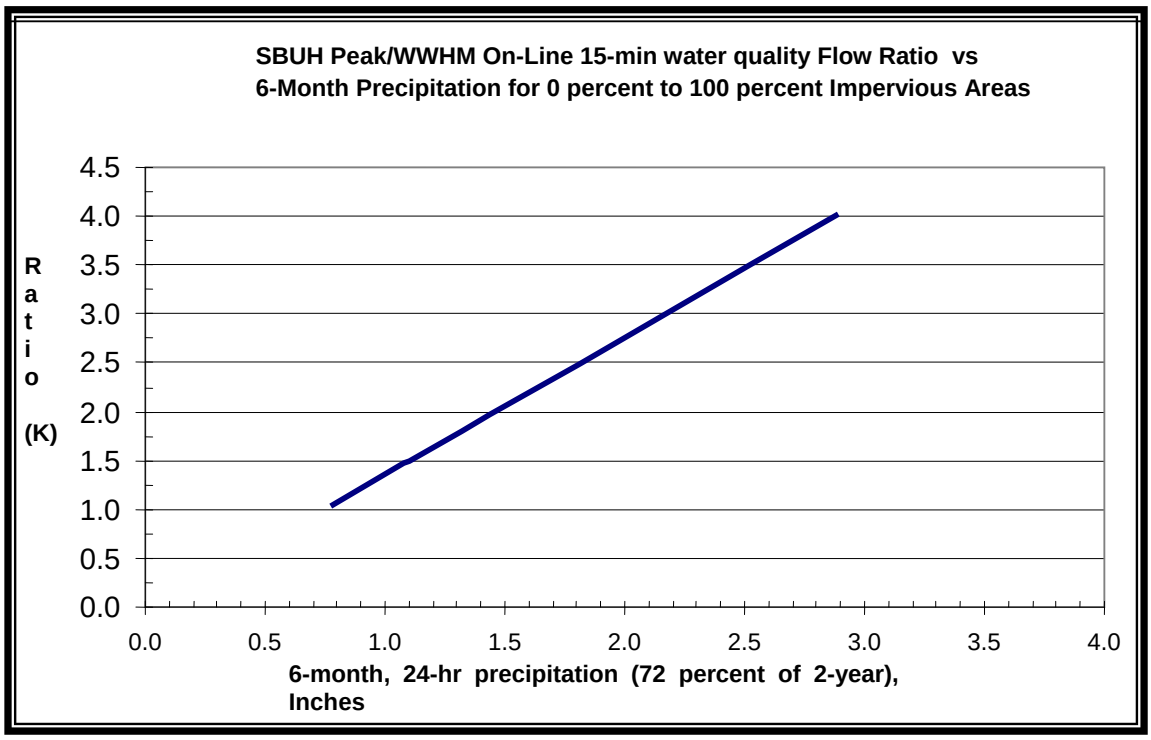


**Figure 8.5a. Ratio of SBUH Peak/Water Quality Flow.**

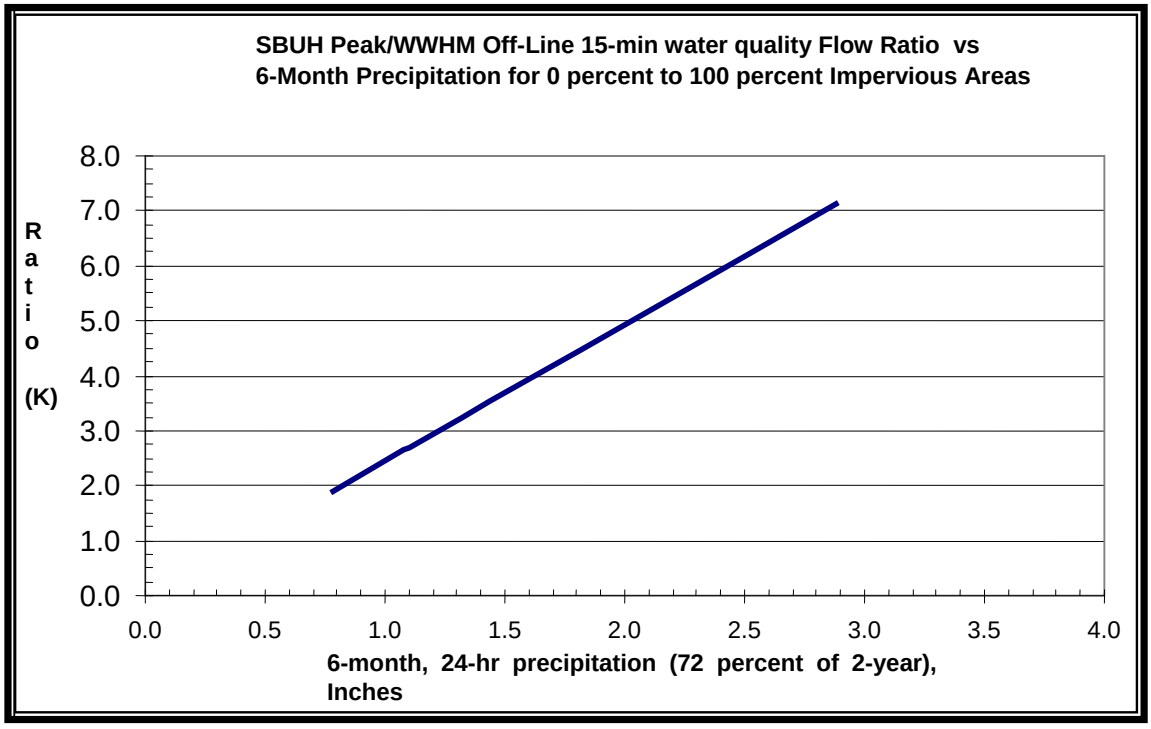


**Figure 8.5b. Ratio of SBUH Peak/Water Quality Flow.**

Use t = 9 minutes for this calculation (use t = 18 minutes for a continuous inflow biofiltration swale). If a biofilter length is greater than the space permits, follow the advice in Step D-6.

If a length less than 100 feet results from this analysis, increase it to 100 feet, the minimum allowed. In this case, it may be possible to save some space in width and still meet all criteria. This possibility can be checked by computing V in the 100 feet biofilter for t = 9 minutes, recalculating A (if V less than 1 foot/sec) and recalculating T.

**D-8**. If there is still not sufficient space for the biofilter, Gig Harbor and the project applicant should consider the following solutions (listed in order of preference):

- Divide the site drainage to flow to multiple biofilters.
- Use infiltration to provide lower discharge rates to the biofilter (only if the infiltration requirements in Volume III, Chapter 3 are met).
- Increase vegetation height and design depth of flow (note: the design must ensure that vegetation remains standing during design flow).
- Reduce the developed surface area to gain space for biofiltration.
- Increase the longitudinal slope.
- Increase the side slopes.
- Nest the biofilter within or around another BMP.

### *Check for Stability (Minimizing Erosion)*

The stability check must be performed for the combination of highest expected flow and least vegetation coverage and height. A check is not required for biofiltration swales that are located "off-line" from the primary conveyance/detention system. Maintain the same units as in the biofiltration capacity analysis.

**SC-1**. Perform the stability check for the 100-year recurrence interval flow using 15-minute time steps using an approved continuous runoff model. If 15-minute time steps are not available, the designer can use the100-year hourly peak flows times an adjustment factor of 1.6 to approximate peak flows in 15-minute time steps.

**SC-2**. Estimate the vegetation coverage ("good" or "fair") and height on the first occasion that the biofilter will receive flow, or whenever the

coverage and height will be least. Avoid flow introduction during the vegetation establishment period by timing planting or bypassing.

**SC-3.** Estimate the degree of retardance from Table 8.2. When uncertain, be conservative by selecting a relatively low degree.

**Table 8.2. Guide for Selecting Degree of Retardance.** [(a)]

| Coverage | Average Grass Height (inches) | Degree of Retardance |
|---|---|---|
| Good | <2 | E. Very Low |
| | 2-6 | D. Low |
| | 6-10 | C. Moderate |
| | 11-24 | B. High |
| | >30 | A. Very High |
| Fair | <2 | E. Very Low |
| | 2-6 | D. Low |
| | 6-10 | D. Low |
| | 11-24 | C. Moderate |
| | >30 | B. High |

[a] See Chow (1959). In addition, Chow recommended selection of retardance C for a grass-legume mixture 6-8 inches high and D for a mixture 4-5 inches high. No retardance recommendations have appeared for emergent wetland species. Therefore, judgment must be used. Since these species generally grow less densely than grasses, using a "fair" coverage would be a reasonable approach.

The maximum permissible velocity for erosion prevention (Vmax) is 3 feet per second.

### *Stability Check (SC) Steps*

**SC-4.** Select a trial Manning's n for the high flow condition. The minimum value for poor vegetation cover and low height (possibly, knocked from the vertical by high flow) is 0.033. A good initial choice under these conditions is 0.04.

**SC-5.** Refer to Figure 8.6 to obtain a first approximation for VR of 3 ft/second.

**SC-6.** Compute hydraulic radius, R, from VR in Figure 8.6 and a Vmax

**SC-7**. Use Manning's equation to solve for the actual VR.

**SC-8.** Compare the actual VR from Step SC-7 and first approximation from Step SC-5. If they do not agree within 5 percent, repeat Steps SC-4 to SC-8 until acceptable agreement is reached. If n<0.033 is needed to get agreement, set n = 0.033, repeat Step SC-7, and then proceed to Step SC-9.

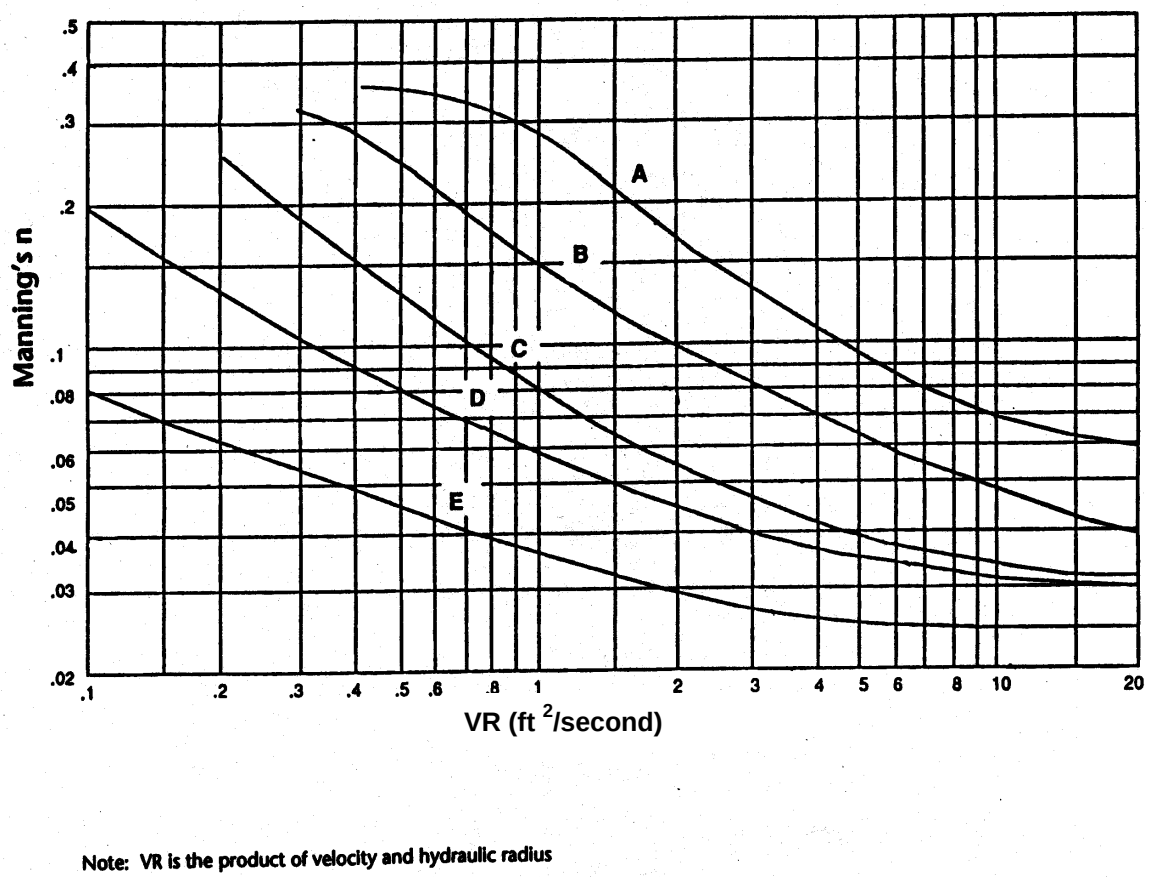


Note: VR is the product of velocity and hydraulic radius

Source: Livingston, et al., 1984

**Figure 8.6. The Relationship of Manning's n with VR for Various Degrees of Flow Retardance (A-E).**

**SC-9.** Compute the actual V for the final design conditions:

Check to be sure $V < V_{max}$ of 3 ft/second.

**SC-10**. Compute the required swale cross-sectional area, A, for stability:

**SC-11**. Compare the A, computed in Step SC-10 of the stability analysis, with the A from the biofiltration capacity analysis (Step D-5).

If less area is required for stability than is provided for capacity, the capacity design is acceptable. If not, use A from Step SC-10 of the stability analysis and recalculate channel dimensions.

**SC-12**. Calculate the depth of flow at the stability check design flow rate condition for the final dimensions and use A from Step SC-10.

**SC-13.** Compare the depth from Step SC-12 to the depth used in the biofiltration capacity design (Step D-1). Use the larger of the two and add 0.5 feet of freeboard to obtain the total depth ($y_t$) of the swale. Calculate the top width for the full depth using the appropriate equation.

**SC-14.** Recalculate the hydraulic radius: (use b from Step D-4 calculated previously for biofiltration capacity, or Step SC-11, as appropriate, and $y_t$ = total depth from Step SC-13).

**SC-15.** Make a final check for capacity based on the stability check design storm (this check will ensure that capacity is adequate if the largest expected event coincides with the greatest retardance). Use Equation 1, a Manning's n selected in Step D-2, and the calculated channel dimensions, including freeboard, to compute the flow capacity of the channel under these conditions. Use R from Step SC-14, above, and $A = b(y_t) + Z(y_t)^2$ using b from Step D-4, D-15, or SC-11 as appropriate.

If the flow capacity is less than the stability check design storm flow rate, increase the channel cross-sectional area as needed for this conveyance. Specify the new channel dimensions.

### *Completion Step (CO)*

**CO.** Review all of the criteria and guidelines for biofilter planning, design, installation, and operation above and specify all of the appropriate features for the application.

### *Example of Design Calculations for Biofiltration Swales*

**Preliminary Steps**

**P-1**. Assume that the continuous runoff model based Water Quality Design Flow Rate in 15-minute time-steps, Q, is 0.2 cfs. Assume an on-line facility.

**P-2.** Assume the slope (s) is 2 percent.

**P-3.** Assume the vegetation will be a grass-legume mixture and it will be infrequently mowed.

### *Design for Biofiltration Swale Capacity*

**D-1.** Set winter grass height at 5 inches and the design flow depth (y) at 3 inches.

**D-2.** Use n = 0.20 to $n_2$ = 0.30

**D-3.** Base the design on a trapezoidal shape, with a side slope Z = 3.

**D-4a.** Calculate the bottom width, b;

Where:

| | |
|---|---|
| n = 0.20 | y = 0.25 ft |
| Q = 0.2 cfs | s = 0.02 |
| Z = 3 | |

$$b \approx \frac{2.5Qn}{1.49y^{1.67}s^{0.5}} - Zy$$

$b \approx 4.0$ ft

At $n_2$; $b_2 = 6.5$ ft

**D-4b.** Calculate the top width (T)

$T = b + 2yZ = 4.0 + [2(0.25)(3)] = 5.5$ ft

**D-5.** Calculate the cross-sectional area (A)

$A = by + Zy^2 = (4.0)(0.25) + (3)(0.25^2) = 1.19$ ft²

**D-6.** Calculate the flow velocity (V)

$$V = K\frac{Q}{A} = 0.17 \text{ ft/sec}$$

for K = 1. Actual K is determined per Figure 8.5a

0.17<1.0 ft/sec ∴ OK

**D-7** Calculate the Length (L)

L = Vt(60 sec/min)

= 0.17 (9)(60)

For t = 9 min, L = 92 ft. at n; expand to a minimum of 100 foot length per design criterion

At $n_2$; L = 100 ft.

Note: Where b is less than the maximum value, it may be possible to reduce L by increasing b. In this case, because L is determined by the requirement for a minimum length of 100 ft, it is not possible.

### *Check for Channel Stability*

**SC-1.** Base the check on passing the 100-year recurrence interval flow (15-minute time steps) through a swale with a mixture of Kentucky bluegrass and tall fescue on loose erodible soil. Until WWHM peak flow rates in 15-minute time steps are available the designer can use the WWHM 100-year hourly peak flows times an adjustment factor of 1.6 to approximate peak flows in 15-minute time steps. Assume that the adjusted peak Q is 1.92 cfs.

**SC-2.** Base the check on a grass height of 3 inches with "fair" coverage (lowest mowed height and least cover, assuming flow bypasses or does not occur during grass establishment).

**SC-3.** From Table 8.2, Degree of Retardance = D (low)

$$\text{Set } V_{max} = 3 \text{ ft/sec}$$

**SC-4.** Select trial Manning's n = 0.04

**SC-5**. From Figure 8.6, $VR_{appx} = 3$ ft²/s

**SC-6**. Calculate R

$$R = \frac{VR_{appx}}{V_{max}} = 1.0 \text{ ft}$$

**SC-7**. Calculate $VR_{actual}$

$$VR_{actual} = \frac{1.49}{n} R^{1.67} s^{0.5} = 5.25 \text{ ft}^2 / \text{sec}$$

**SC-8.** $VR_{actual}$ from Step SC-7 > $VR_{appx}$ from Step SC-5 by > 5 percent.

Select new trial n = 0.0475

Figure 8.6: $VR_{appx} = 1.7$ ft²/s

R = 0.57 ft.

$VR_{actual} = 1.73$ ft²/s (within 5 percent of $VR_{appx} = 1.7$)

**SC-9**. Calculate V

$$V = \frac{VR_{actual}}{R} = \frac{1.73}{0.57} = \quad 3 \text{ ft} \quad / \text{sec}$$

$$V = 3 \text{ ft/sec} \leq 3 \text{ ft/sec, Vmax} \therefore \text{OK}$$

**SC-10.** Calculate Stability Area

$$A_{Stability} = \frac{Q}{V} = \frac{1.92}{3} = 0.64 \text{ ft}^2$$

**SC-11**. Stability Check

$A_{Stability}$ = 0.64 ft² is less than $A_{Capacity}$ from Step D-5 ($A_{Capacity}$ = 1.19 ft$^2$). $\therefore$OK

If $A_{Stability} > A_{Capacity}$, it will be necessary to select new trial sizes for width and flow depth (based on space and other considerations), recalculate $A_{Capacity}$, and repeat steps SC-10 and SC-11.

**SC-12.** Calculate depth of flow at the stability design flow rate condition using the quadratic equation solution:

$$y = \frac{-b \pm \sqrt{b^2 - 4Z(-A)}}{2Z}$$

For b = 4, y = 0.14 ft (positive root)

**SC-13**. Use the greater value of y from SC-12 or that assumed in D-1. In this case, the greater depth is 0.25-foot, which was the basis for the biofiltration capacity design. Add 0.5 ft freeboard to that depth.

Total channel depth = 0.75 ft

Top Width = b + 2yZ

= 4 + (2)(0.75)(3)

= 8.5 ft

**SC-14.** Recalculate hydraulic radius and flow rate

For b = 4 ft, y = 0.75 ft

Z = 3, s = 0.02, n = 0.2

A = by + Zy² = 4.68 ft²

R = {by + Zy²}/{b + 2y(Z² + 1)$^{0.5}$} = 0.53 ft.

**SC-15.** Calculate Flow Capacity at Greatest Resistance

$$Q = \frac{1.49AR^{0.67}s^{0.5}}{n} = 3.2 \text{ cfs}$$

Q = 3.2 cfs > 1.92 cfs $\therefore$OK

Completion Step

**CO-1.** Assume 100 ft of swale length is available.

The final channel dimensions are:

Bottom width, b = 4 ft
Channel depth = 0.75 ft
Top width = b + 2yZ = 8.5 ft

**No check dams are needed for a 2 percent slope.**

### *Soil Criteria*

- The following top soil mix at least 8 inches deep:
  - Sandy loam — 60-90 percent
  - Clay — 0-10 percent
  - Composted organic matter — 10-30 percent (excluding animal waste, toxics)
- Use compost amended soil where practicable
- Till to at least an 8-inch depth
- For longitudinal slopes of less than 2 percent use more sand to obtain more infiltration
- If groundwater contamination is a concern, seal the bed with clay or a treatment liner.

### *Vegetation Criteria*

- See Tables 8.3, 8.4, and 8.5 for recommended grasses, wetland plants, and groundcovers. The following invasive species shall not be used: *Phalaris arundinaceae* (reed canarygrass), *Lythrum salicaria* (purple loosestrife), *Phragmites* spp. (reeds), *Iris pseudocorus* (yellow iris) and Cattails (*Typha* spp.).
- Select fine, turf-forming, water-resistant grasses where vegetative growth and moisture will be adequate for growth.
- Irrigate if moisture is insufficient during dry weather season.
- Use sod with low clay content and where needed to initiate adequate vegetative growth. Preferably sod should be laid to a minimum of 1-foot vertical depth above the swale bottom.
- Consider sun/shade conditions for adequate vegetative growth and avoid prolonged shading of any portion not planted with shade tolerant vegetation.
- Stabilize soil areas upslope of the biofilter to prevent erosion.

- Fertilizing a biofilter should be avoided if at all possible in any application where nutrient control is an objective. Test the soil for nitrogen, phosphorous, and potassium and consult with a landscape professional about the need for fertilizer in relation to soil nutrition and vegetation requirements. If use of a fertilizer cannot be avoided, use a slow-release fertilizer formulation in the least amount needed.

***Recommended Grasses (see Tables 8.3 and 8.4 below)***

**Table 8.3. Grass Seed Mixes Suitable for Biofiltration Swale Treatment Areas.**

| Mix 1 | | Mix 2 | |
|---|---|---|---|
| 75-80 percent | tall or meadow fescue | 60-70 percent | tall fescue |
| 10-15 percent | seaside/colonial bentgrass | 10-15 percent | seaside/colonial bentgrass |
| 5-10 percent | Redtop | 10-15 percent | meadow foxtail |
| | | 6-10 percent | alsike clover |
| | | 1-5 percent | marshfield big trefoil |
| | | 1-6 percent | Redtop |

Note: *all percentages are by weight. * based on Briargreen, Inc.*

**Table 8.4. Groundcovers and Grasses Suitable for the Upper Side Slopes of a Biofiltration Swale in Western Washington.**

| Groundcovers | |
|---|---|
| kinnikinnick* | *Arctostaphylos uva-ursi* |
| Epimedium | *Epimedium grandiflorum* |
| creeping forget-me-not | *Omphalodes verna* |
| -- | *Euonymus lanceolata* |
| yellow-root | *Xanthorhiza simplissima* |
| -- | *Genista* |
| white lawn clover | *Trifolium repens* |
| white sweet clover* | *Melilotus alba* |
| ------- | *Rubus calycinoides* |
| strawberry* | *Fragaria chiloensis* |
| broadleaf lupine* | *Lupinus latifolius* |
| **Grasses (drought-tolerant, minimum mowing)** | |
| dwarf tall fescues | *Festuca* spp. (e.g., Many Mustang, Silverado) |
| hard fescue | *Festuca ovina duriuscula* (e.g., Reliant, Aurora) |
| tufted fescue | *Festuca amethystine* |
| buffalo grass | *Buchloe dactyloides* |
| red fescue* | *Festuca rubra* |
| tall fescue grass* | *Festuca arundinacea* |
| blue oatgrass | *Helictotrichon sempervirens* |

### *Construction Criteria*

The biofiltration swale should not be put into operation until areas of exposed soil in the contributing drainage catchment have been sufficiently stabilized. Deposition of eroded soils can impede the growth of grass in the swale and reduce swale treatment effectiveness. Thus, effective erosion and sediment control (ESC) measures should remain in place until the swale vegetation is established (see Volume II for ESC BMPs). Avoid compaction during construction. Grade biofilters to attain uniform longitudinal and lateral slopes.

### *Maintenance Criteria*

Maintain access to biofilter inlet, outlet, and to mowing (Figure 8.7).

- If a swale is equipped with underdrains, vehicular traffic on the swale bottom (other than grass mowing equipment) should be avoided to prevent damage to the drainpipes.

See Volume I, Minimum Requirement #10, and Appendix I-B for additional information on maintenance requirements.

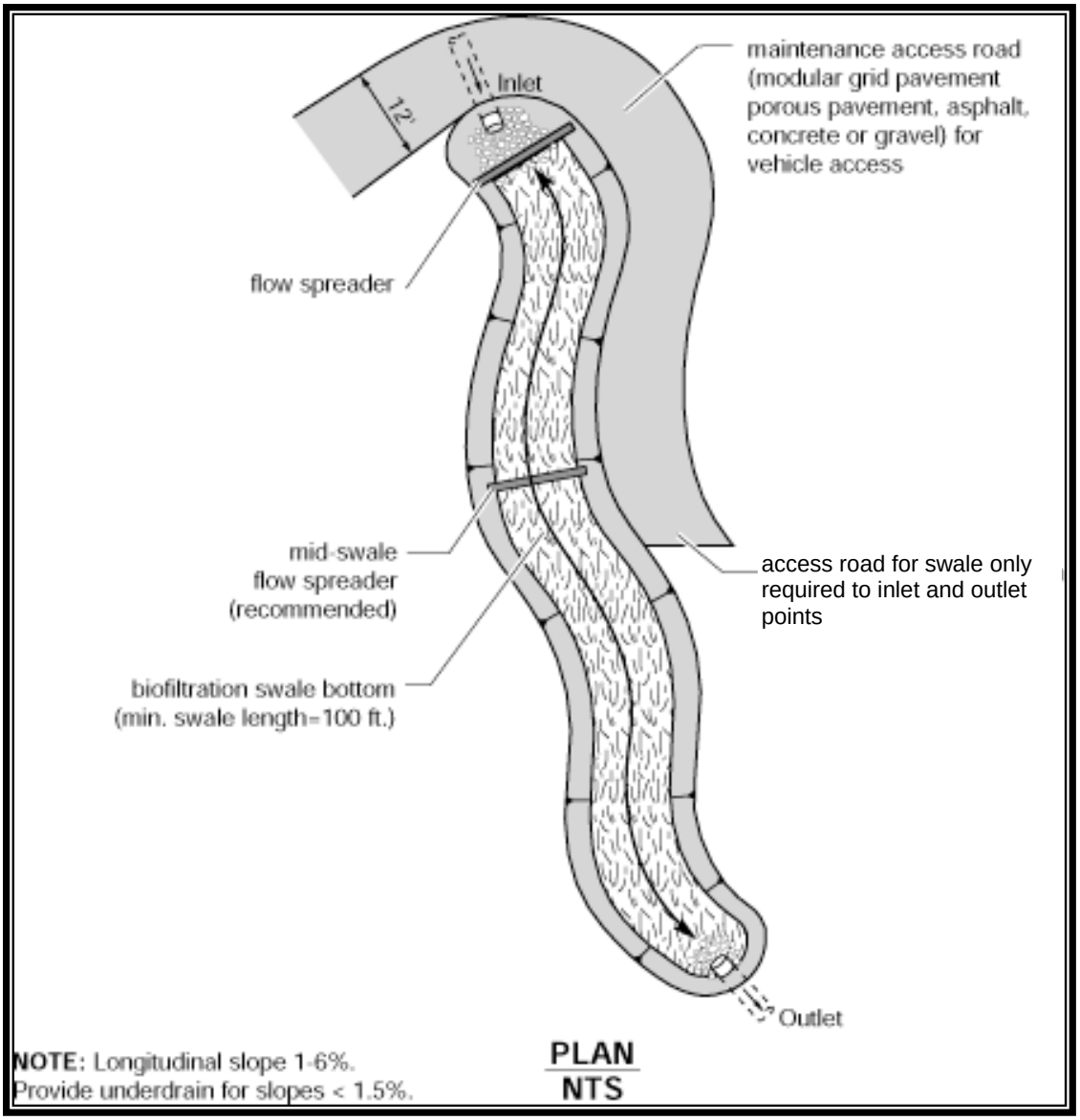


**Figure 8.7. Biofiltration Swale Access Features.**

## BMP T8.20 Wet Biofiltration Swale

A *wet biofiltration swale* is a variation of a basic biofiltration swale for use where the longitudinal slope is slight, water tables are high, or continuous low base flow is likely to result in saturated soil conditions. Where saturation exceeds about 2 weeks, typical grasses will die. Thus, vegetation specifically adapted to saturated soil conditions is needed. Different vegetation in turn requires modification of several of the design parameters for the basic biofiltration swale.

### *Performance Objectives*

To remove low concentrations of pollutants such as total suspended solids, heavy metals, nutrients, and petroleum hydrocarbons.

### *Applications/Limitations*

Wet biofiltration swales are applied where a basic biofiltration swale is desired but not allowed or advisable because one or more of the following conditions exist:

- The swale is on till soils and is downstream of a detention pond providing flow control.
- Saturated soil conditions are likely because of seeps or base flows on the site.
- Longitudinal slopes are slight (generally less than 2 percent).

### *Design Criteria*

Use the same design approach as for basic biofiltration swales except to add the following:

**Adjust for extended wet season flow.** If the swale will be downstream of a detention pond providing flow control, multiply the treatment area (bottom width times length) of the swale by 2, and readjust the swale length, if desired. Maintain a 5:1 length to width ratio.

**Intent:** An increase in the treatment area of swales following detention ponds is required because of the differences in vegetation established in a constant flow environment. Flows following detention are much more prolonged. These prolonged flows result in more stream-like conditions than are typical for other wet biofilter situations. Since vegetation growing in streams is often less dense, this increase in treatment area is needed to ensure that equivalent pollutant removal is achieved in extended flow situations.

**Swale Geometry:** Same as specified for basic biofiltration swales except for the following modifications:

- ***Criterion 1:*** The bottom width may be increased to 25 feet maximum, but a length-to-width ratio of 5:1 must be provided. No longitudinal dividing berm is needed. *Note: The minimum swale length is still 100 feet.*

- ***Criterion 2:*** If longitudinal slopes are greater than 2 percent, the wet swale must be stepped so that the slope within the stepped sections averages 2 percent. Steps may be made of retaining walls, log check dams, or short riprap sections. **No underdrain or low-flow drain is required**.

**High-Flow Bypass:** A high-flow bypass (i.e., an off-line design) is required for flows greater than the off-line water quality design flow that has been increased by the ratio indicated in Figure 8.5b. The bypass is necessary to protect wetland vegetation from damage. Unlike grass, wetland vegetation will not quickly regain an upright attitude after being laid down by high flows. New growth, usually from the base of the plant, often taking several weeks, is required to regain its upright form. The bypass may be an open channel parallel to the wet biofiltration swale.
**Water Depth and Base Flow:** Same as for basic biofiltration swales except the design water depth shall be 4 inches for all wetland vegetation selections, and **no underdrains or low-flow drains are required**.

**Flow Velocity, Energy Dissipation, and Flow Spreading:** Same as for basic biofiltration swales except no flow spreader is needed.

**Access:** Same as for basic biofiltration swales except access is only required to the inflow and the outflow of the swale; access along the length of the swale is not required. Also, wheel strips may not be used for access in the swale.

**Intent:** An access road is not required along the length of a wet swale because of infrequent access needs. Frequent mowing or harvesting is not desirable. In addition, wetland plants are fairly resilient to sediment-induced changes in water depth, so the need for access should be infrequent.

**Soil Amendment:** Same as for basic biofiltration swales.

**Planting Requirements:** Same as for basic biofiltration swales except for the following modifications:

- A list of acceptable plants and recommended spacing is shown in Table 8.5. In general, it is best to plant several species to increase

the likelihood that at least some of the selected species will find growing conditions favorable.

**Table 8.5. Recommended Plants for Wet Biofiltration Swale.**

| Common Name | Scientific Name | Spacing (on center) |
|---|---|---|
| Shortawn foxtail | *Alopecurus aequalis* | seed |
| Water foxtail | *Alopecurus geniculatus* | seed |
| Spike rush | *Eleocharis spp.* | 4 inches |
| Slough sedge* | *Carex obnupta* | 6 inches or seed |
| Sawbeak sedge | *Carex stipata* | 6 inches |
| Sedge | *Carex* spp. | 6 inches |
| Western mannagrass | *Glyceria occidentalis* | seed |
| Velvetgrass | *Holcus mollis* | seed |
| Slender rush | *Juncus tenuis* | 6 inches |
| Watercress* | *Rorippa nasturtium-aquaticum* | 12 inches |
| Water parsley* | *Oenanthe sarmentosa* | 6 inches |
| Hardstem bulrush | *Scirpus acutus* | 6 inches |
| Small-fruited bulrush | *Scirpus microcarpus* | 12 inches |

** Good choices for swales with significant periods of flow, such as those downstream of a detention facility. Note: Cattail (Typha latifolia) is not appropriate for most wet swales because of its very dense and clumping growth habit which prevents water from filtering through the clump.*

- A wetland seed mix may be applied by hydroseeding, but if coverage is poor, planting of rootstock or nursery stock is required. Poor coverage is considered to be more than 30 percent bare area through the upper two-thirds of the swale after 4 weeks.

**Recommended Design Features:** Same as for basic biofiltration swales

**Construction Considerations:** Same as for basic biofiltration swales

**Maintenance Considerations:** Same as for basic biofiltration swales except mowing of wetland vegetation is not required. See Volume I, Minimum Requirement #10, and Appendix I-B for additional information on maintenance requirements.

However, harvesting of very dense vegetation may be desirable in the fall after plant die-back to prevent the sloughing of excess organic material into receiving waters.

## BMP T8.30 Continuous Inflow Biofiltration Swale

In situations where water enters a biofiltration swale continuously along the side slope rather than discretely at the head, a different design approach–the continuous inflow biofiltration swale–is needed. The basic swale design is modified by increasing swale length to achieve an equivalent average residence time.

### *Applications*

A continuous inflow biofiltration swale is to be **used when inflows are not concentrated**, such as locations along the shoulder of a road without curbs. This design may also be **used where frequent, small point flows enter a swale**, such as through curb inlet ports spaced at intervals along a road, or from a parking lot with frequent curb cuts. In general, no inlet port should carry more than about 10 percent of the flow.

A continuous inflow swale is not appropriate for a situation in which significant lateral flows enter a swale at some point downstream from the head of the swale. In this situation, the swale width and length must be recalculated from the point of confluence to the discharge point in order to provide adequate treatment for the increased flows.

### *Design Criteria*

Same as specified for **basic biofiltration swale** except for the following:

- The design flow for continuous inflow swales must include runoff from the pervious side slopes draining to the swale along the entire swale length. Therefore, they must be on-line facilities.
- If only a single design flow is used, the flow rate at the outlet should be used. The goal is to achieve an average residence time through the swale of 9 minutes as calculated using the on-line water quality design flow rate multiplied by the ratio, K, in Figure 8.5a. Assuming an even distribution of inflow into the side of the swale double the hydraulic residence time to a minimum of 18 minutes.
- For continuous inflow biofiltration swales, interior side slopes above the water quality design treatment elevation shall be planted in grass. A typical lawn seed mix or the biofiltration seed mixes are acceptable. Landscape plants or groundcovers other than grass may not be used anywhere between the runoff inflow elevation and the bottom of the swale. **Intent:** The use of grass on interior side slopes reduces the chance of soil erosion and transfer of pollutants from landscape areas to the biofiltration treatment area.

## BMP T8.40 Basic Filter Strip

A basic filter strip is flat with no side slopes (Figure 8.8). Contaminated stormwater is distributed as sheet flow across the inlet width of a biofilter strip.

### *Applications/Limitations*

The basic filter strip is typically used on-line and adjacent and parallel to a paved area such as parking lots, driveways, and roadways. Where a filter strip area is compost-amended to a minimum of 10 percent organic content in accordance with BMP T5.13; with hydroseeded grass maintained at 95 percent density and a 4-inch length by mowing and periodic re-seeding (possible landscaping with herbaceous shrubs), the filter strip serves as an enhanced treatment option.

### *Design Criteria for Filter Strips*

- Use the Design Criteria specified in Table 8.1.
- If groundwater contamination is a concern, seal the bed with clay or a treatment liner.
- Filter strips should only receive sheet flow.
- For roadways with curbs, use curb cuts ≥ 12-inch wide and 1-inch above the filter strip inlet. Curb cuts should be spaced at 10 feet, maximum.

Calculate the design flow depth using Manning's equation as follows:

$$KQ = (1.49A\ R^{0.67}\ s^{0.5})/n$$

Substituting for AR:

$$KQ = (1.49Ty^{1.67}\ s^{0.5})/n$$

Where:

$Ty = A_{rectangle,\ ft}{}^{2}$

$y \approx R_{rectangle}$, design depth of flow, ft. (1 inch maximum)

Q = peak Water Quality design flow rate based on an approved continuous runoff model, $ft^3/sec$

K = The ratio determined by using Figure 8.5a

n = Manning's roughness coefficient

s = Longitudinal slope of filter strip parallel to direction of flow

T = Width of filter strip perpendicular to the direction of flow, ft.

A = Filter strip inlet cross-sectional flow area (rectangular), $ft^2$

R = hydraulic radius, ft.

Rearranging for y:

$y = [KQn/1.49Ts^{0.5}]^{0.6}$
y must not exceed 1 inch

*Note: As in swale design an* a*djustment factor of K accounts for the differential between the WWHM Water Quality design flow rate and the SBUH design flow.*

Calculate the design flow velocity V, ft./sec., through the filter strip:

$$V = KQ/Ty$$

V must not exceed 0.5 ft./sec

Calculate required length, in feet, of the filter strip at the minimum hydraulic residence time, t, of 9 minutes:

$$L = tV = 540V$$

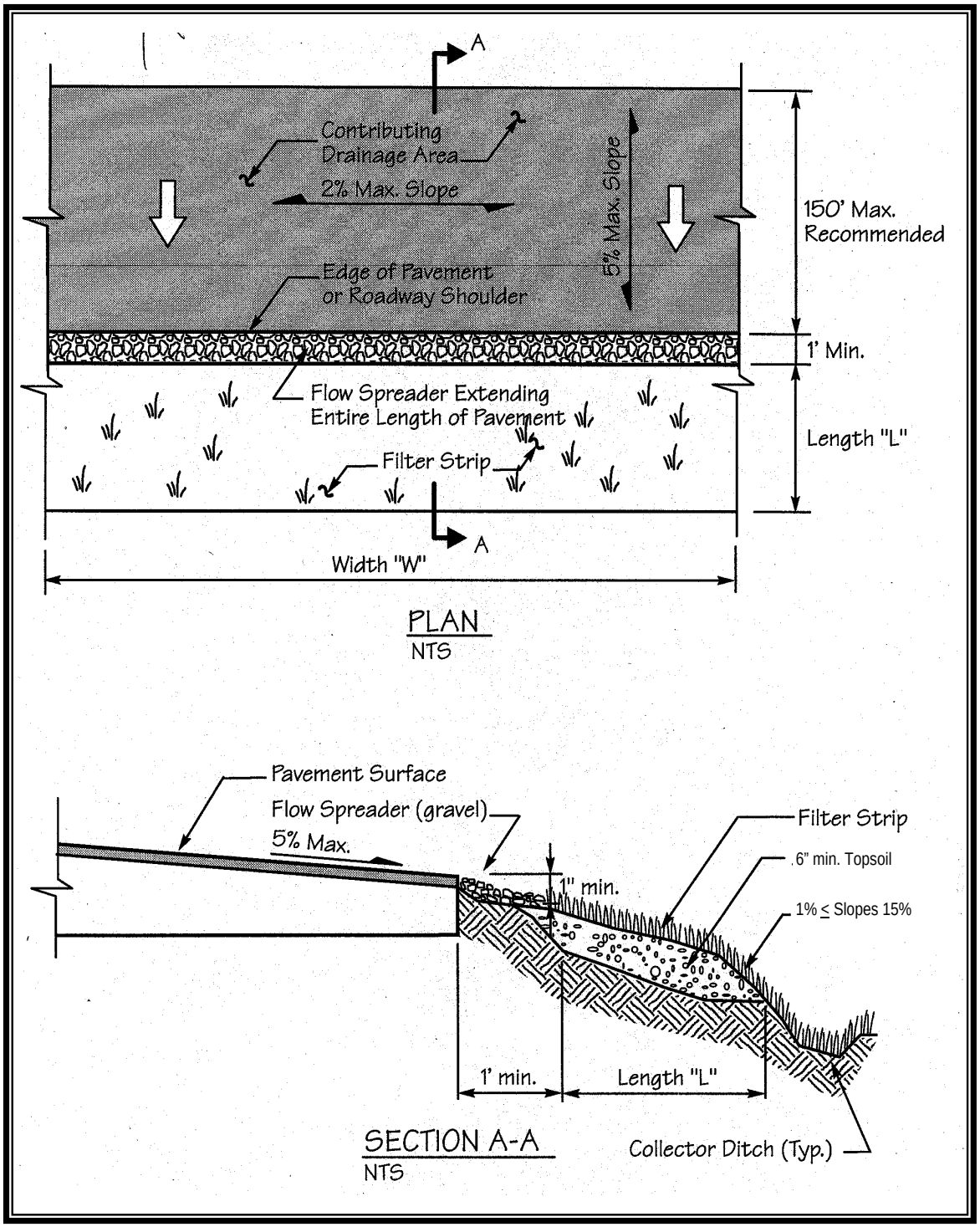


**Figure 8.8. Typical Filter Strip.**

## BMP T8.50 Narrow Area Filter Strip

This section describes a filter strip design[1] for impervious areas with flowpaths of 30 feet or less that can drain along their widest dimension to grassy areas.

### *Applications/Limitations*

A narrow area filter strip could be used at roadways with limited right-of-way, or for narrow parking strips, the narrow strip. If space is available to use the basic filter strip design, that design should be used in preference to the narrow filter strip.

The treatment objectives, applications and limitations, design criteria, materials specifications, and construction and maintenance requirements set forth in the basic filter strip design apply to narrow filter strip applications.

### *Design Criteria*

Design criteria for narrow area filter strips are the *same as specified for basic filter strips*. The sizing of a narrow area filter strip is based on the length of flowpath draining to the filter strip and the longitudinal slope of the filter strip itself (parallel to the flowpath).

*Step 1:* Determine the length of the flowpath from the upstream to the downstream edge of the impervious area draining sheet flow to the strip. Normally this is the same as the width of the paved area, but if the site is sloped, the flow path may be longer than the width of the impervious area.

*Step 2:* Calculate the longitudinal slope of the filter strip (along the direction of unconcentrated flow), averaged over the total width of the filter strip. The minimum sizing slope is 2 percent. If the slope is less than 2 percent, use 2 percent for sizing purposes. The maximum allowable filter strip slope is 20 percent. If the slope exceeds 20 percent, the filter strip must be stepped down the slope so that the treatment areas between drop sections do not have a longitudinal slope greater than 20 percent. Drop sections must be provided with erosion protection at the base and flow spreaders to re-spread flows. Vertical drops along the slope must not exceed 12 inches in height. If this is not possible, a different treatment facility must be selected.

---

[1] This narrow area filter strip design method is included here because technical limitations exist in the basic design method, which result in filter strips that are proportionately longer as the contributing drainage becomes narrower (a result that is counter-intuitive). Research by several parties is underway to evaluate filter strip design parameters. This research may lead to more stringent design requirements that would supersede the design criteria presented here.

*Step 3:* Select the appropriate filter strip length for the flowpath length and filter strip longitudinal slope (Steps 1 and 2 above) from the graph in Figure 8.9. The filter strip must be designed to provide this minimum length *L* along the entire stretch of pavement draining into it.

*To use the graph:* Find the length of the flowpath on one of the curves (interpolate between curves as necessary). Move along the curve to the point where the design longitudinal slope of the filter strip (x-axis) is directly below. Read the filter strip length on the y-axis which corresponds to the intersection point.

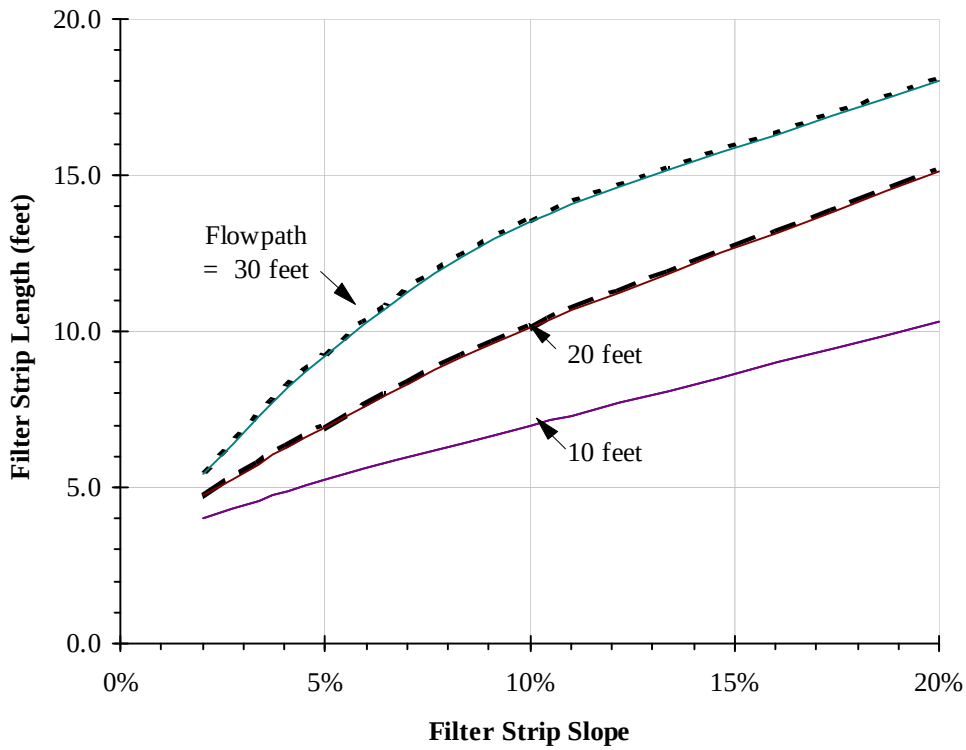


*Note: minimum allowable filter strip length is 4 feet*

**Figure 8.9. Filter Strip Lengths for Narrow Right-of-Way.**

# Chapter 9 - Wet Pool Facilities

*Note: Figures in Chapter 9 are from the King County Surface Water Design Manual*

## 9.1 Purpose

This chapter presents the methods, criteria, and details for analysis and design of wet ponds, wet vaults, and stormwater wetlands. These facilities have as a common element a permanent pool of water - the wet pool. Each of the wet pool facilities can be combined with a detention or flow control pond in a combined facility. Included are the following specific facility designs:

- BMP T9.10 – Wet ponds - Basic and Large
- BMP T9.20 – Wet vaults
- BMP T9.30 – Stormwater Wetlands
- BMP T9.40 – Combined Detention and Wet Pool Facilities.

## 9.2 Application

The wet pool facility designs described for the four BMPs in this chapter will achieve the performance objectives cited in Chapter 3 for specific treatment menus.

## 9.3 Best Management Practices for Wet Pool Facilities

The four BMPs discussed below are currently recognized as effective treatment techniques using wet pool facilities. The specific BMPs that are selected should be coordinated with the treatment facility menus discussed in Chapter 3.

## BMP T9.10 Wet Ponds – Basic and Large

A wet pond is a constructed stormwater pond that retains a permanent pool of water ("wet pool") at least during the wet season. The volume of the wet pool is related to the effectiveness of the pond in settling particulate pollutants. As an option, a shallow marsh area can be created within the permanent pool volume to provide additional treatment for nutrient removal. Peak flow control can be provided in the "live storage" area above the permanent pool. Attachments Section B, Detail 2.0 illustrates a typical wet pond BMP.

The following design criteria cover two wet pond applications - the basic wet pond and the large wet pond. Large wet ponds are designed for higher levels of pollutant removal. As with other similar BMPs, wet ponds may be used as sedimentation ponds during construction. However, any sediment that has accumulated in the pond must be removed after construction is complete and before the pond is permanently on-line.

### *Applications and Limitations*

A wet pond requires a larger area than a biofiltration swale or a sand filter, but it can be integrated to the contours of a site fairly easily. In till soils, the wet pond holds a permanent pool of water that provides an attractive aesthetic feature. In more porous soils, wet ponds may still be used, but water seepage from unlined cells could result in a dry pond, particularly in the summer months. Therefore, as outlined in Section 4.3, the first cell of the wet pond must be lined with a low permeability liner. As long as the first cell retains a permanent pool of water, this situation will not reduce the pond's effectiveness but may be an aesthetic drawback.

Wet ponds are designed to maintain a standing pool of water through much of the wet season up to the design treatment elevation. Although high groundwater levels must be avoided for most stormwater facilities (due to buoyancy concerns), the standing water in a wet pond will neutralize any buoyancy effects from high groundwater. Thus, the wet pool storage of wet ponds may be provided below the groundwater level without interfering unduly with treatment effectiveness. However, if combined with a detention function, the live storage must be above the seasonal high groundwater level.

Wet ponds may be single-purpose facilities, providing only runoff treatment, or they may be combined with a detention pond to also provide flow control. If combined, the wet pond can often be stacked under the detention pond with little further loss of development area. See BMP T9.40 for a description of combined detention and wet pool facilities.

### *Design Criteria*

The primary design factor that determines a wet pond's treatment efficiency is the volume of the wet pool. The larger the wet pool volume, the greater the potential for pollutant removal. For a basic wet pond, the wet pool volume provided shall be equal to or greater than the **91st percentile, 24-hour runoff volume estimated by an approved continuous runoff model.** A large wet pond requires a wet pool volume at least 1.5 times larger than the 91st percentile, 24-hour runoff volume. Also important are the avoidance of short-circuiting and the promotion of plug flow. ***Plug flow*** describes the hypothetical condition of stormwater moving through the pond as a unit, displacing the "old" water in the pond with incoming flows. To prevent short-circuiting, water is forced to flow, to the extent practical, to all potentially available flow routes, avoiding "dead zones" and maximizing the time water stays in the pond during the active part of a storm.

Design features that encourage plug flow and avoid dead zones are:

- Dissipating energy at the inlet.
- Providing a large length-to-width ratio.
- Providing a broad surface for water exchange using a berm designed as a broad-crested weir to divide the wet pond into two cells rather than a constricted area such as a pipe.
- Maximizing the flowpath between inlet and outlet, including the vertical path, also enhances treatment by increasing residence time.

### Sizing Procedure

Procedures for determining a wet pond's dimensions and volume are outlined below.

Step 1: Identify required wet pool volume using an approved continuous runoff model – the 91st percentile, 24-hour runoff volume. A large wet pond requires a volume at least 1.5 times the 91st percentile, 24-hour runoff volume.

Step 2: Determine wet pool dimensions. Determine the wet pool dimensions satisfying the design criteria outlined below and illustrated in Attachments Section B, Detail 2.0. A simple way to check the volume of each wet pool cell is to use the following equation:

$$V = \frac{h(A_1 + A_2)}{2}$$

where $V$ = wet pool volume (cf)
$h$ = wet pool average depth (ft)
$A_1$ = water quality design surface area of wet pool (sf)
$A_2$ = bottom area of wet pool (sf)

Step 3: Design pond outlet pipe and determine primary overflow water surface. The pond outlet pipe shall be placed on a reverse grade from the pond's wet pool to the outlet structure. Use the following procedure to design the pond outlet pipe and determine the primary overflow water surface elevation:

- Use the nomographs in Volume III, Appendix III-C to select a trial size for the pond outlet pipe sufficient to pass the on-line water quality design flow, $Q_{wq}$ indicated by an approved continuous runoff model.
- Use the nomographs in Volume III, Appendix III-C to determine the critical depth $d_c$ at the outflow end of the pipe for $Q_{wq}$.
- Use the nomographs in Volume III, Appendix III-C to determine the flow area $A_c$ at critical depth.
- Calculate the flow velocity at critical depth using continuity equation ($V_c = Q_{wq} / A_c$).
- Calculate the velocity head $V_H$ ($V_H = V_c^2 / 2g$, where $g$ is the gravitational constant, 32.2 feet per second).
- Determine the primary overflow water surface elevation by adding the velocity head and critical depth to the invert elevation at the outflow end of the pond outlet pipe (i.e., overflow water surface elevation = outflow invert + $d_c$ + $V_H$).
- Adjust outlet pipe diameter as needed and repeat steps (a) through (e).

Step 4: Determine wet pond dimensions. General wet pond design criteria and concepts are shown in Attachments Section B, Detail 2.0.

**Wet Pool Geometry**

- The wet pool shall be divided into two cells separated by a baffle or berm. The first cell shall contain between 25 to 35 percent of the total wet pool volume. Both cells must have level pond bottoms.
- The baffle or berm volume shall not count as part of the total wet pool volume. The term baffle means a vertical divider placed across the entire width of the pond, stopping short of the bottom.

A berm is a vertical divider typically built up from the bottom, or if in a vault, connects all the way to the bottom.

> Intent: The full-length berm or baffle promotes plug flow and enhances quiescence and laminar flow through as much of the entire water volume as possible. Alternative methods to the full-length berm or baffle that provide equivalent flow characteristics may be approved on a case-by-case basis by Gig Harbor.

- Sediment storage shall be provided in the first cell. The sediment storage shall have a minimum depth of 1 foot. A fixed sediment depth monitor should be installed in the first cell to gauge sediment accumulation unless an alternative gauging method is proposed.

- The minimum depth of the first cell shall be 4 feet, exclusive of sediment storage requirements. The depth of the first cell may be greater than the depth of the second cell.

- The maximum depth of each cell shall not exceed 8 feet (exclusive of sediment storage in the first cell). Pool depths of 3 feet or shallower (second cell) shall be planted with emergent wetland vegetation (see Planting requirements).

- Inlets and outlets shall be placed to maximize the flowpath through the facility. The ratio of flowpath length to width from the inlet to the outlet shall be at least 3:1. The ***flowpath length*** is defined as the distance from the inlet to the outlet, as measured at mid-depth. The ***width*** at mid-depth can be found as follows: width = (average top width + average bottom width)/2.

- Wet ponds with wet pool volumes less than or equal to 4,000 cubic feet may be single celled (i.e., no baffle or berm is required). However, it is especially important in this case that the flow path length be maximized. The ratio of flow path length to width shall be at least 4:1 in single celled wet ponds, but should preferably be 5:1.

- All inlets shall enter the first cell. If there are multiple inlets, the length-to-width ratio shall be based on the average flowpath length for all inlets.

- The wet pool cells shall be lined in accordance with the liner requirements outlined in Section 4.3.

**Berms, Baffles, and Slopes**

- A berm or baffle shall extend across the full width of the wet pool, and tie into the wet pond side slopes. If the berm embankments are

greater than 4 feet in height, the berm must be constructed by excavating a key equal to 50 percent of the embankment cross-sectional height and width. This requirement may be waived if recommended by a geotechnical engineer for specific site conditions. The geotechnical analysis shall address situations in which one of the two cells is empty while the other remains full of water.

- The top of the berm may extend to the water quality design water surface or be 1 foot below the water quality design water surface. If at the water quality design water surface, berm side slopes should be 3H:1V. Berm side slopes may be steeper (up to 2:1) if the berm is submerged 1 foot.

  Intent: Submerging the berm is intended to enhance safety by discouraging pedestrian access when side slopes are steeper than 3H:1V. An alternative to the submerged berm design is the use of barrier planting to prevent easy access to the divider berm in an unfenced wet pond.

- If good vegetation cover is not established on the berm, erosion control measures should be used to prevent erosion of the berm back-slope when the pond is initially filled.

- The interior berm or baffle may be a retaining wall provided that the design is prepared and stamped by a licensed civil engineer. If a baffle or retaining wall is used, it should be submerged 1 foot below the design water surface to discourage access by pedestrians.

- Note that wet ponds can also be designed include oil containment booms at locations where oil control is required. Design guidelines for oil containment booms are not included in this volume, but can be found in the 2006 WSDOT Highway Runoff Manual, Chapter 5, BMP RT.22.

**Embankments**

Embankments that impound water must comply with the Washington State Dam Safety Regulations (Chapter 173-175 WAC). If the impoundment has a storage capacity (including both water and sediment storage volumes) greater than 10 acre-feet (435,600 cubic feet or 3.26 million gallons) above natural ground level, then dam safety design and review are required by Ecology. See Volume III, Section 3.2.1.

**Inlet and Outlet**

See Attachments Section B, Detail 2.0 for details on the following requirements:

- The inlet to the wet pond shall be submerged with the inlet pipe invert a minimum of 2 feet from the pond bottom (not including sediment storage). The top of the inlet pipe should be submerged at least 1 foot, if possible. Conveyance modeling for the stormwater system leading to the wet pond must be shown to include consideration of the backwater effects of the submerged inlet.

  Intent: The inlet is submerged to dissipate energy of the incoming flow. The distance from the bottom is set to minimize resuspension of settled sediments. Alternative inlet designs that accomplish these objectives are acceptable.

- The runoff shall be discharged uniformly and at a velocity below 3 feet per second in Type A and B soils, and 5 feet per second in Type C and D soils or as necessary to prevent erosion and to insure quiescent conditions within the BMP.

- An outlet structure shall be provided. Either a Type 2 catch basin with a grated opening (jail house window) or a manhole with a cone grate (birdcage) may be used (see Attachments Section A, Detail 16.0 for an illustration). The outlet structure receives flow from the pond outlet pipe. The grate or birdcage openings provide an overflow route should the pond outlet pipe become clogged. The overflow criteria provided below specifies the sizing and position of the grate opening.

- The pond outlet pipe (as opposed to the manhole or Type 2 catch basin outlet pipe) shall be back-sloped or have a turn-down elbow, and extend 1 foot below the water quality design water surface. Note: A floating outlet, set to draw water from 1 foot below the water surface, is also acceptable if vandalism concerns are adequately addressed.

  Intent: The inverted outlet pipe provides for trapping of oils and floatables in the wet pond.

- The pond outlet pipe shall be sized, at a minimum, to pass the on-line water quality design flow. Note: The highest invert of the outlet pipe sets the water quality design water surface elevation.

- The overflow criteria for single-purpose (treatment only, not combined with flow control) wet ponds are as follows:

  - The requirement for primary overflow is satisfied by either the grated inlet to the outlet structure or by a birdcage above the pond outlet structure.

- The bottom of the grate opening in the outlet structure shall be set at or above the height needed to pass the water quality design flow through the pond outlet pipe. *Note: The grate invert elevation sets the overflow water surface elevation.*
- The grated opening should be sized to pass the 100-year recurrence interval design flow. The capacity of the outlet system should be sized to pass the peak flow for the conveyance requirements.

- An emergency spillway shall be provided and designed according to the requirements for detention ponds (see Volume III, Section 3.2.1).

- The city may require a bypass/ shutoff valve to enable the pond to be taken off-line for maintenance purposes.

- A gravity drain for maintenance is required where feasible. The engineer must demonstrate why a drain is not feasible and show in the O&M Plan how to drain the pond.

  Intent: It is anticipated that sediment removal will only be needed for the first cell in the majority of cases. The gravity drain is intended to allow water from the first cell to be drained to the second cell when the first cell is pumped dry for cleaning.

- The drain invert shall be at least 6 inches below the top elevation of the dividing berm or baffle. Deeper drains are encouraged where feasible, but must be no deeper than 18 inches above the pond bottom.

  Intent: To prevent highly sediment-laden water from escaping the pond when drained for maintenance.

- The drain shall be at least 8 inches (minimum) diameter and shall be controlled by a valve. Use of a shear gate is allowed only at the inlet end of a pipe located within an approved structure.

  Intent: Shear gates often leak if water pressure pushes on the side of the gate opposite the seal. The gate should be situated so that water pressure pushes toward the seal.

- Operational access to the valve shall be provided to the finished ground surface.

- The valve location shall be accessible and well-marked with 1 foot of paving placed around the box. It must also be protected from damage and unauthorized operation.

- A valve box is allowed to a maximum depth of 5 feet without an access manhole. If over 5 feet deep, an access manhole or vault is required.

- All metal parts shall be corrosion-resistant. Galvanized materials should not be used unless unavoidable.

  Intent: Galvanized metal contributes zinc to stormwater, sometimes in very high concentrations.

**Access and Setbacks**

- All facilities shall be a minimum of 20 feet from any structure, property line, and any vegetative buffer required by Gig Harbor, and 100 feet from any septic tank/drainfield.

- All facilities shall be a minimum of 50 feet from any steep (greater than 15 percent) slope. A geotechnical report must address the potential impact of a wet pond on a steep slope.

- Access and maintenance roads shall be provided and designed according to the requirements for detention ponds (see Volume III, Section 3.2.1). Access and maintenance roads shall extend to both the wet pond inlet and outlet structures. An access ramp shall be provided to the bottom of all cells, unless trackhoe (maximum reach of 20 feet) can reach all portions of the cell and can load a truck parked at the pond edge or on the internal berm of a wet pond or combined pond.

- If the dividing berm is also used for access, it should be built to sustain loads of up to 80,000 pounds.

**Planting Requirements**

Planting requirements for detention ponds also apply to wet ponds.

- Large wet ponds intended for phosphorus control should not be planted within the cells, as the plants will release phosphorus in the winter when they die off.

- If the second cell of a basic wet pond is 3 feet or shallower, the bottom area shall be planted with emergent wetland vegetation. See Table 9.1 for recommended emergent wetland plant species for wet ponds.

  Intent: Planting of shallow pond areas helps to stabilize settled sediment and prevent resuspension.

**Table 9.1. Emergent Wetland Plant Species Recommended for Wet Ponds.**

| Species | Common Name | Notes | Maximum Depth |
|---|---|---|---|
| *Agrostis exarata* (1) | Spike bent grass | Prairie to coast | to 2 ft |
| *Carex stipata* | Sawbeak sedge | Wet ground | |
| *Eleocharis palustris* | Spike rush | Margins of ponds, wet meadows | to 2 ft |
| *Glyceria occidentalis* | Western mannagrass | Marshes, pond margins | to 2 ft |
| *Juncus tenuis* | Slender rush | Wet soils, wetland margins | |
| *Oenanthe sarmentosa* | Water parsley | Shallow water along stream and pond margins; needs saturated soils all summer | |
| *Scirpus atrocinctus* (formerly *S. cyperinus*) | Woolgrass | Tolerates shallow water; tall clumps | |
| *Scirpus microcarpus* | Small-fruited bulrush | Wet ground to 18 inches depth | 18 inches |
| *Sagittaria latifolia* | Arrowhead | | |
| **INUNDATION 1 TO 2 FT** | | | |
| *Agrostis exarata* (1) | Spike bent grass | Prairie to coast | |
| *Alisma plantago-aquatica* | Water plantain | | |
| *Eleocharis palustris* | Spike rush | Margins of ponds, wet meadows | |
| *Glyceria occidentalis* | Western mannagrass | Marshes, pond margins | |
| *Juncus effusus* | Soft rush | Wet meadows, pastures, wetland margins | |
| *Scirpus microcarpus* | Small-fruited bulrush | Wet ground to 18 inches depth | 18 inches |
| *Sparganium emmersum* | Bur reed | Shallow standing water, saturated soils | |
| **INUNDATION 1 TO 3 FT** | | | |
| *Carex obnupta* | Slough sedge | Wet ground or standing water | 1.5 to 3 ft |
| *Beckmania syzigachne* (1) | Western sloughgrass | Wet prairie to pond margins | |
| *Scirpus acutus* (2) | Hardstem bulrush | Single tall stems, not clumping | to 3 ft |
| *Scirpus validus* (2) | Softstem bulrush | | |
| **INUNDATION GREATER THAN 3 FT** | | | |
| *Nuphar polysepalum* | Spatterdock | Deep water | 3 to 7.5 ft |
| *Nymphaea odorata* (1) | White waterlily | Shallow to deep ponds | to 6 ft |

Notes:
(1) Non-native species. Beckmania syzigachne is native to Oregon. Native species are preferred.
(2) Scirpus tubers must be planted shallower for establishment, and protected from foraging waterfowl until established. Emerging aerial stems should project above water surface to allow oxygen transport to the roots.
Primary sources: Municipality of Metropolitan Seattle, Water Pollution Control Aspects of Aquatic Plants, 1990. Hortus Northwest, Wetland Plants for Western Oregon, Issue 2, 1991. Hitchcock and Cronquist, Flora of the Pacific Northwest, 1973.

Note: The recommendations in Table 9.1 are for western Washington only. Local knowledge should be used to adapt this information if used in other areas.

- Cattails (*Typha latifolia*) are not recommended because they tend to crowd out other species and will typically establish themselves anyway.

- If the wet pond discharges to a phosphorus-sensitive lake or wetland, shrubs that form a dense cover should be planted on slopes above the water quality design water surface on at least three sides. For banks that are berms, no planting is allowed if the berm is regulated by dam safety requirements. The purpose of planting is to discourage waterfowl use of the pond and to provide shading. Some suitable trees and shrubs include vine maple (*Acer circinatum*), wild cherry (*Prunus emarginata*), red osier dogwood (*Cornus stolonifera*), California myrtle (*Myrica californica*), Indian plum (*Oemleria cerasiformis*), and Pacific yew (*Taxus brevifolia*) as well as numerous ornamental species.

## BMP T9.20 Wet Vaults

A wet vault is an underground structure similar in appearance to a detention vault, except that a wet vault has a permanent pool of water (wet pool) which dissipates energy and improves the settling of particulate pollutants (see the wet vault details in Figure 9.1). Being underground, the wet vault lacks the biological pollutant removal mechanisms, such as algae uptake, present in surface wet ponds.

### *Applications and Limitations*

A wet vault may be used for commercial, industrial, or roadway projects if there are space limitations precluding the use of other treatment BMPs. The use of **wet vaults for residential development is highly discouraged.** Combined detention and wet vaults are allowed; see BMP T9.40.

A wet vault is believed to be ineffective in removing dissolved pollutants such as soluble phosphorus or metals such as copper. There is also concern that oxygen levels will decline, especially in warm summer months, because of limited contact with air and wind. However, the extent to which this potential problem occurs has not been documented.

Below-ground structures like wet vaults are relatively difficult and expensive to maintain. The need for maintenance is often not seen and as a result routine maintenance does not occur. Therefore, wet vaults **shall only be permitted after it has been demonstrated to the satisfaction of the city that more desirable BMPs are not practicable.**

If a wet vault/tank is designed to provide runoff treatment but not runoff quantity control it must be located “off-line” from the primary conveyance/detention system. Flows above the peak flow for the water quality design storm (see Sizing Procedure below) must bypass the facility in a separate conveyance to the point of discharge. A mechanism must also be provided at the bypass point to take the facility “off-line” for maintenance purposes.

If oil control is required for a project, a wet vault may be combined with an API oil/water separator.

### *Design Criteria*

#### Sizing Procedure

As with wet ponds, the primary design factor that determines the removal efficiency of a wet vault is the volume of the wet pool. The larger the volume, the higher the potential for pollutant removal. Performance is

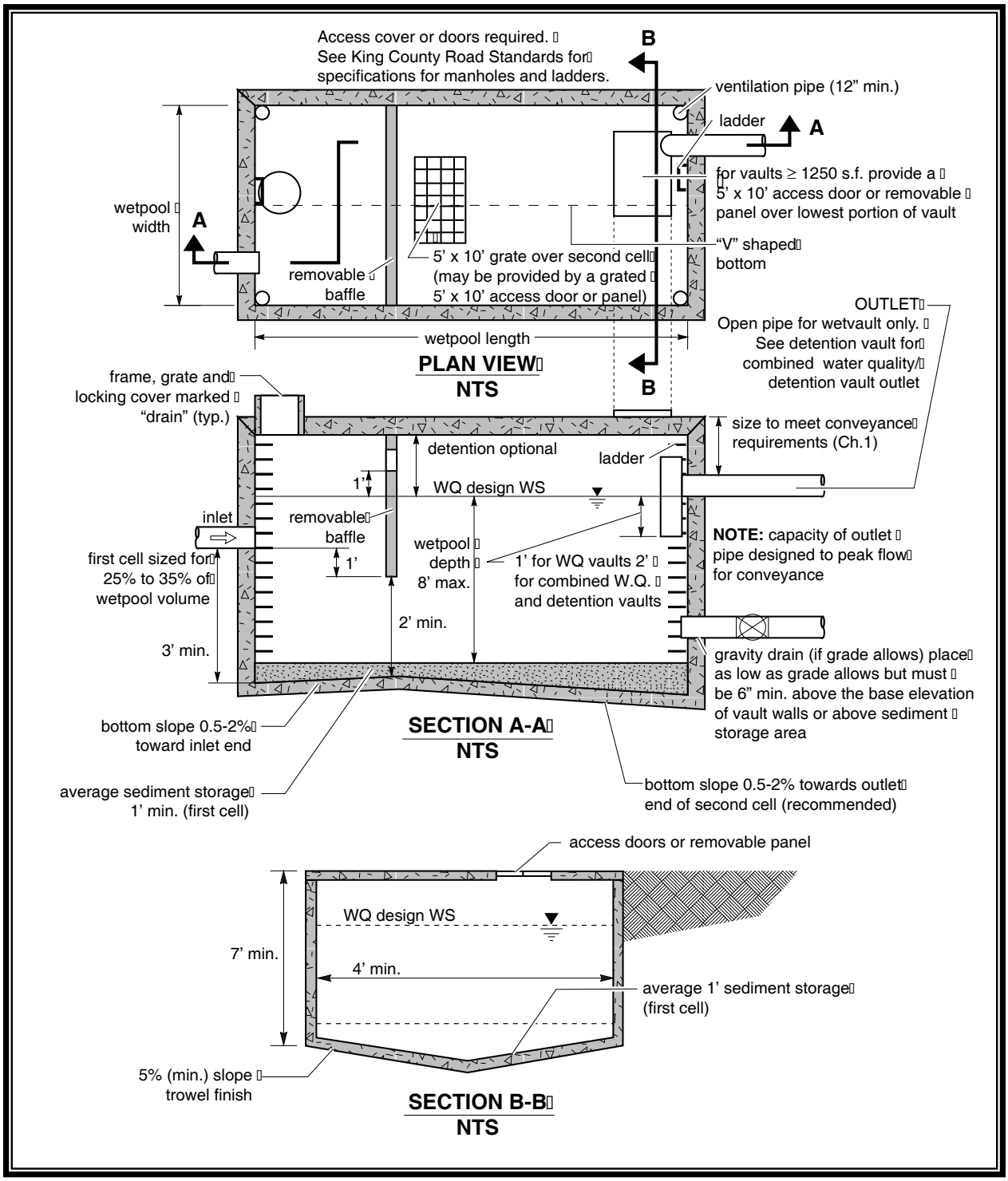


**Figure 9.1. Wet Vault Geometry.**

also improved by avoiding dead zones (like corners) where little exchange occurs, using large length-to-width ratios, dissipating energy at the inlet, and ensuring that flow rates are uniform to the extent possible and not increased between cells.

The sizing procedure for a wet vault is identical to the sizing procedure for a wet pond. The wet pool volume for the wet vault **shall be equal to or greater than the 91st percentile, 24-hour runoff volume estimated by an approved continuous runoff model**. In addition, because wet vaults are designed to be off-line, the facility must be designed with a flow splitter that can engage a bypass when the flow rate exceeds the on-line water quality design flow rate. The on-line water quality design flow rate is determined by multiplying Q, the on-line water quality design flow rate predicted by an approved continuous runoff model, by the ratio determined in Figure 8.5a.

Typical design details and concepts for the wet vault are shown in Figure 9.1.

Same as specified for wet ponds (see BMP T9.10) except for the following two modifications:

- The sediment storage in the first cell shall be an average of 1-foot. Because of the V-shaped bottom, the depth of sediment storage needed above the bottom of the side wall is roughly proportional to vault width according to the schedule below:

| Vault Width | Sediment Depth (from bottom of side wall) |
|---|---|
| 15' | 10” |
| 20' | 9” |
| 40' | 6” |
| 60' | 4” |

- The second cell shall be a minimum of 3 feet deep since planting cannot be used to prevent resuspension of sediment in shallow water as it can in open ponds.

**Vault Structure**

- The vault shall be separated into two cells by a wall or a removable baffle. If a wall is used, a 5-foot by 10-foot removable maintenance access must be provided for both cells. If a removable baffle is used, the following criteria apply:

- The baffle shall extend from a minimum of 1 foot above the water quality design water surface to a minimum of 1 foot below the invert elevation of the inlet pipe.
- The lowest point of the baffle shall be a minimum of 2 feet from the bottom of the vault, and greater if feasible.

- If the vault is less than 2,000 cubic feet (inside dimensions), or if the length-to-width ratio of the vault pool is 5:1 or greater, the baffle or wall may be omitted and the vault may be one-celled.

- The two cells of a wet vault should not be divided into additional subcells by internal walls. If internal structural support is needed, it is preferred that post and pier construction be used to support the vault lid rather than walls. Any walls used within cells must be positioned so as to lengthen, rather than divide, the flowpath.

  Intent: Treatment effectiveness in wet pool facilities is related to the extent to which plug flow is achieved and short-circuiting and dead zones are avoided. Structural walls placed within the cells can interfere with plug flow and create significant dead zones, reducing treatment effectiveness.

- The bottom of the first cell shall be sloped toward the access opening. Slope should be between 0.5 percent (minimum) and 2 percent (maximum). The second cell may be level (longitudinally) sloped toward the outlet, with a high point between the first and second cells. The intent of sloping the bottom is to direct the sediment accumulation to the closest access point for maintenance purposes. Sloping the second cell towards the access opening for the first cell is also acceptable.

- The vault bottom shall slope laterally a minimum of 5 percent from each side towards the center, forming a broad "V" to facilitate sediment removal. Note: More than one "V" may be used to minimize vault depth.

  *Exception*: Gig Harbor may allow the vault bottom to be flat if removable panels are provided over the entire vault. Removable panels should be at grade, have stainless steel lifting eyes, and weigh no more than 5 tons per panel.

- The highest point of a vault bottom must be at least 6 inches below the outlet elevation to provide for sediment storage over the entire bottom.

- Provision for passage of flows should the outlet plug shall be provided.

- Wet vaults may be constructed using arch culvert sections provided the top area at the water quality design water surface is, at a minimum, equal to that of a vault with vertical walls designed with an average depth of 6 feet.

  Intent: To prevent decreasing the surface area available for oxygen exchange.

- Wet vaults shall conform to the "Materials" and "Structural Stability" criteria specified for detention vaults in Volume III, Section 3.2.3.

- Where pipes enter and leave the vault below the water quality design water surface, they shall be sealed using a non-porous, non-shrinking grout.

**Inlet and Outlet**

- The inlet to the wet vault shall be submerged with the inlet pipe invert a minimum of 3 feet from the vault bottom. The top of the inlet pipe shall be submerged at least 1 foot.

  - The inlet pipe must also maintain a flow rate of 2 ft/s under the design water quality storm event to minimize sediment settling in the pipe.

  - Conveyance modeling for the stormwater system leading to the vault must be shown to include consideration of the backwater effects of the submerged vault inlet. Additional information on backwater analyses is provided in Volume III, Chapter 4.

    Intent: The submerged inlet is to dissipate energy of the incoming flow. The distance from the bottom is to minimize resuspension of settled sediments. Alternative inlet designs that accomplish these objectives are acceptable.

- The capacity of the outlet pipe and available head above the outlet pipe should be designed to convey the 100-year recurrence interval design flow for developed site conditions without overtopping the vault. The available head above the outlet pipe must be a minimum of 6 inches.

- The flowpath length should be maximized from inlet to outlet for all inlets to the vault.

- The outlet pipe shall be back-sloped or have tee section, the lower arm of which should extend 1 foot below the water quality design

water surface to provide for trapping of oils and floatables in the vault.

- Gig Harbor may require a bypass/shutoff valve to enable the vault to be taken off-line for maintenance.

**Access Requirements**

Same as for detention vaults (see Volume III, Section 3.2.3) except for the following additional requirement for wet vaults:

- A minimum of 50 square feet of grate should be provided over the second cell. For vaults in which the surface area of the second cell is greater than 1,250 square feet, 4 percent of the top should be grated. This requirement may be met by one grate or by many smaller grates distributed over the second cell area. Note: a grated access door can be used to meet this requirement.

  Intent: The grate allows air contact with the wet pool in order to minimize stagnant conditions which can result in oxygen depletion, especially in warm weather.

**Access Roads, Right-of-Way, and Setbacks**

Same as for detention vaults (see Volume III, Section 3.2.3).

### *Construction Criteria*

- Sediment that has accumulated in the vault must be removed after construction in the drainage area is complete.

### *Modifications for Combining with a Baffle Oil/Water Separator*

If the project site is a high-use site and a wet vault is proposed, the vault may be combined with a baffle oil/water separator to meet the runoff treatment requirements with one facility rather than two. Structural modifications and added design criteria are given below. However, the maintenance requirements for baffle oil/water separators must be adhered to, in addition to those for a wet vault. This will result in more frequent inspection and cleaning than for a wet vault used only for total suspended solids removal. See Chapter 10 for information on maintenance of baffle oil/water separators.

- The sizing procedures for the baffle oil/water separator (Chapter 10) should be run as a check to ensure the vault is large enough. If the oil/water separator sizing procedures result in a larger vault size, increase the wet vault size to match.

- An oil retaining baffle shall be provided in the second cell near the vault outlet. The baffle should not contain a high-flow overflow, or else the retained oil will be washed out of the vault during large storms.

- The vault shall have a minimum length-to-width ratio of 5:1.

- The vault shall have a design water depth-to-width ratio of 1:3 to 1:2.

- The vault shall be watertight and shall be coated to protect from corrosion.

- Separator vaults shall have a shutoff mechanism on the outlet pipe to prevent oil discharges during maintenance and to provide emergency shut-off capability in case of a spill. A valve box and riser shall also be provided and accessible.

- Wet vaults used as oil/water separators must be off-line and must bypass flows greater than the off-line water quality design flow multiplied by the off-line ratio indicated in Figure 8.5b.

  Intent: This design minimizes the entrainment and/or emulsification of previously captured oil during very high flow events.

## BMP T9.30 Stormwater Treatment Wetlands

Stormwater treatment wetlands are shallow man-made ponds that are designed to treat stormwater through the biological processes associated with emergent aquatic plants (see the stormwater wetland details in Figures 9.2 and 9.3). Wetlands created to mitigate disturbance impacts, such as filling, may not also be used as stormwater treatment facilities.

In general, stormwater wetlands perform well to remove sediment, metals, and pollutants that bind to humic or organic acids. Phosphorus removal in stormwater wetlands is highly variable.

### *Applications and Limitations*

This stormwater wetland design occupies about the same surface area as wet ponds, but has the potential to be better integrated aesthetically into a site because of the abundance of emergent aquatic vegetation. The most critical factor for a successful design is the provision of an adequate supply of water for most of the year. Careful planning is needed to be sure sufficient water will be retained to sustain good wetland plant growth. Since water depths are shallower than in wet ponds, water loss by evaporation is an important concern. Stormwater wetlands are a good water quality facility choice in areas with high winter groundwater levels.

### *Design Criteria*

When used for stormwater treatment, stormwater wetlands employ some of the same design features as wet ponds. However, instead of gravity settling being the dominant treatment process, pollutant removal mediated by aquatic vegetation and the microbiological community associated with that vegetation becomes the dominant treatment process. Thus when designing wetlands, water volume is not the dominant design criteria. Rather, factors which affect plant vigor and biomass are the primary concerns.

### Sizing Procedure

Step 1: The volume of a basic wet pond is used as a template for sizing the stormwater wetland. The design volume is the 91st percentile, 24-hour runoff volume estimated by an approved continuous runoff model.

Step 2: Calculate the surface area of the stormwater wetland. The surface area of the wetland shall be the same as the top area of a wet pond sized for the same site conditions. Calculate the surface area of the stormwater wetland by using the volume from Step 1 and dividing by the average water depth (use 3 feet).

Step 3: Determine the surface area of the first cell of the stormwater wetland. Use the volume determined from Criterion 2 under "Wetland Geometry", and the actual depth of the first cell.

Step 4: Determine the surface area of the wetland cell. Subtract the surface area of the first cell (Step 3) from the total surface area (Step 2).

Step 5: Determine water depth distribution in the second cell. Decide if the top of the dividing berm will be at the surface or submerged (designer's choice). Adjust the distribution of water depths in the second cell according to Criterion 8 under "Wetland Geometry" below. Note: This will result in a facility that holds less volume than that determined in Step 1 above. This is acceptable.

> Intent: The surface area of the stormwater wetland is set to be roughly equivalent to that of a wet pond designed for the same site so as not to discourage use of this option.

Step 6: Choose plants. See Table 9.1 for a list of plants recommended for wet pond water depth zones, or consult a wetland scientist.

**Wetland Geometry**

- Stormwater wetlands shall consist of two cells, a presettling cell and a wetland cell.
- The presettling cell shall contain approximately 33 percent of the wet pool volume calculated in Step 1 above.
- The depth of the presettling cell shall be between 4 feet (minimum) and 8 feet (maximum), excluding sediment storage.
- One foot of sediment storage shall be provided in the presettling cell.
- The presettling cell must include a gravity drain for maintenance.
- The wetland cell shall have an average water depth of about 1.5 feet (plus or minus 3 inches).
- The "berm" separating the two cells shall be shaped such that its downstream side gradually slopes to form the second shallow wetland cell (see the section view in Figure 9.2). Alternatively, the second cell may be graded naturalistically from the top of the dividing berm (see Criterion 8 below).
- The top of berm shall be either at the water quality design water surface or submerged 1 foot below the water quality design water

surface, as with wet ponds. Correspondingly, the side slopes of the berm must meet the following criteria:

- If the top of berm is at the water quality design water surface, the berm side slopes shall be no steeper than 3H:1V.

- If the top of berm is submerged 1 foot, the upstream side slope may be up to 2H:1V. If the berm is at the water surface, then for safety reasons, its slope should be not greater than 3:1, just as the pond banks should not be greater than 3:1 if the pond is not fenced. A steeper slope (2:1 rather than 3:1) is allowable if the berm is submerged in 1 foot of water. If submerged, the berm is not considered accessible, and the steeper slope is allowable.

- Two examples are provided for grading the bottom of the wetland cell. One example is a shallow, evenly graded slope from the upstream to the downstream edge of the wetland cell (see Figure 9.2). The second example is a "naturalistic" alternative, with the specified range of depths intermixed throughout the second cell (see Figure 9.3). A distribution of depths shall be provided in the wetland cell depending on whether the dividing berm is at the water surface or submerged (see Table 9.2 below). The maximum depth is 2.5 feet in either configuration. Other configurations within the wetland geometry constraints listed above may be approved by Gig Harbor.

**Table 9.2. Distribution of Depths in Wetland Cell.**

| Dividing Berm at Water Quality Design Water Surface | | Dividing Berm Submerged 1 Foot | |
|---|---|---|---|
| **Depth Range (ft)** | **Percent** | **Depth Range (ft)** | **Percent** |
| 0.1 to 1 | 25 | 1 to 1.5 | 40 |
| 1 to 2 | 55 | 1.5 to 2 | 40 |
| 2 to 2.5 | 20 | 2 to 2.5 | 20 |

- To the extent possible create a complex microtopography within the wetland.

- Design the flow path to maximize sinuous flow between wetland cells.

### Lining Requirements

Many wetland plants can adapt to periods of summer drought, however the stormwater wetland design should maximize the duration of wet conditions to the extent possible. Therefore, both cells of the stormwater

wetland shall be lined with a low-permeability liner. The criteria for liners given in Section 4.3 must be observed. A minimum of 18 inches of native soil amended with good topsoil or compost (one part compost mixed with three parts native soil) must be placed over the liner. For geomembrane liners, a soil depth of 3 feet is recommended to prevent damage to the liner during planting. Hydric soils are not required.

**Inlet and Outlet**

Inlets and outlets shall be configured per the requirements of wet ponds, see BMP 9.10.

**Access and Setbacks**

- Location of the stormwater wetland relative to site constraints (e.g., buildings, property lines, etc.) shall be the same as for detention ponds (see Volume III, Section 3.2.1).

- Access and maintenance roads shall be provided and designed according to the requirements for detention ponds (see Volume III, Section 3.2.1). Access and maintenance roads shall extend to both the wetland inlet and outlet structures. An access ramp shall be provided to the bottom of the first cell unless all portions of the cell can be reached and sediment loaded from the top of the wetland side slopes.

**Planting Requirements**

The wetland cell shall be planted with emergent wetland plants following the recommendations given in Table 9.1 or the recommendations of a wetland specialist. Note: Cattails (*Typha latifolia*) are not recommended. They tend to escape to natural wetlands and crowd out other species. In addition, the shoots die back each fall and will result in oxygen depletion in the wet pool unless they are removed.

***Construction Criteria***

- Construction and maintenance considerations are the same as for wet ponds.

- Construction of the naturalistic alternative (Option 2) can be easily done by first excavating the entire area to the 1.5-foot average depth. Then soil subsequently excavated to form deeper areas can be deposited to raise other areas until the distribution of depths indicated in the design is achieved.

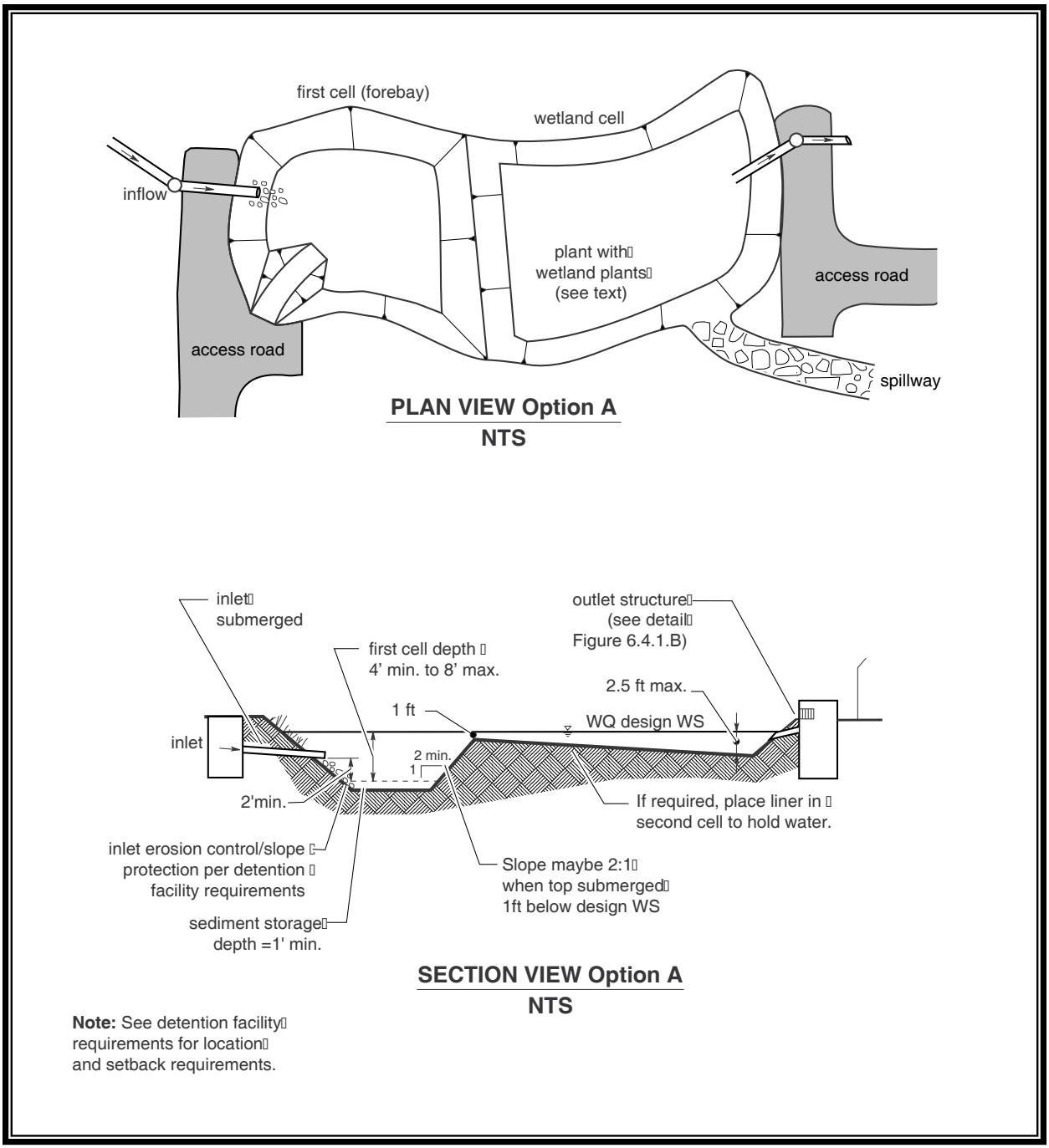


**Figure 9.2. Stormwater Wetland – Option One.**

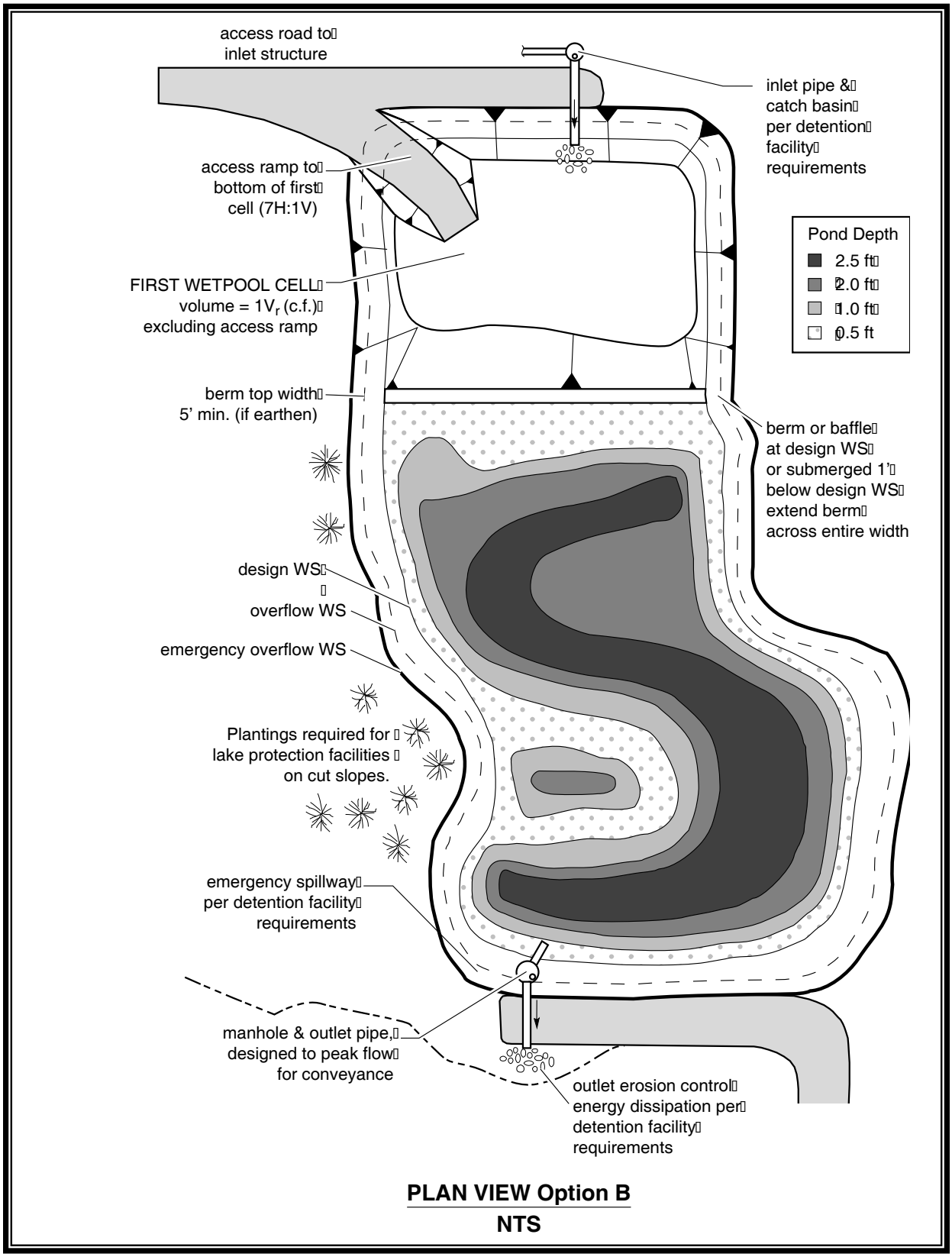


**Figure 9.3. Stormwater Wetland – Option Two.**

## BMP T9.40 Combined Detention and Wet Pool Facilities

Combined detention and water quality wet pool facilities have the appearance of a detention facility but contain a permanent pool of water as well. The following design procedures, requirements, and recommendations cover differences in the design of the stand-alone water quality facility when combined with detention storage. The following combined facilities are addressed:

- Detention/wet pond (basic and large)
- Detention/wet vault
- Detention/stormwater wetland.

There are two sizes of the combined wet pond, a basic and a large, but only a basic size for the combined wet vault and combined stormwater wetland. The facility sizes (basic and large) are related to the pollutant removal goals. See Chapter 3 for more information about treatment performance goals.

### *Applications and Limitations*

Combined detention and water quality facilities are very efficient for sites that also have detention requirements. The water quality facility may often be placed beneath the detention facility without increasing the facility surface area. However, the fluctuating water surface of the live storage will create unique challenges for plant growth and for aesthetics alike.

The basis for pollutant removal in combined facilities is the same as in the stand-alone water quality facilities. However, in the combined facility, the detention function creates fluctuating water levels and added turbulence. For simplicity, the positive effect of the extra live storage volume and the negative effect of increased turbulence are assumed to balance, and are thus ignored when sizing the wet pool volume. For the combined detention/stormwater wetland, criteria that limit the extent of water level fluctuation are specified to better ensure survival of the wetland plants.

Unlike the wet pool volume, the live storage component of the facility should be provided above the seasonal high water table.

### *Combined Detention and Wet Pond (Basic and Large)*

Typical design details and concepts for a combined detention and wet pond are shown in Figures 9.4a and 9.4b. The detention portion of the facility shall meet the design criteria and sizing procedures set forth in Volume III.

### Sizing Procedure

The sizing procedure for combined detention and wet ponds are identical to those outlined for wet ponds and for detention facilities. The wet pool volume for a combined facility shall be equal to or greater than the 91st percentile, 24-hour runoff volume estimated by an approved continuous runoff model. Follow the standard procedure specified in Volume III to size the detention portion of the pond.

### Detention and Wet Pond Geometry

- The wet pool and sediment storage volumes shall not be included in the required detention volume.
- The "Wet Pool Geometry" criteria for wet ponds (see BMP T9.10) shall apply with the following modifications/clarifications:

Criterion 1: The permanent pool may be made shallower to take up most of the pond bottom, or deeper and positioned to take up only a limited portion of the bottom. Note, however, that having the first wet pool cell at the inlet allows for more efficient sediment management than if the cell is moved away from the inlet. Wet pond criteria governing water depth must, however, still be met. See Figure 9.5 for two possibilities for wet pool cell placement.

> Intent: This flexibility in positioning cells is provided to allow for multiple use options, such as volleyball courts in live storage areas in the drier months.

Criterion 2: The minimum sediment storage depth in the first cell is 1 foot. The 6 inches of sediment storage required for detention ponds do not need to be added to this, but 6 inches of sediment storage must be added to the second cell to comply with the detention sediment storage requirement.

### Berms, Baffles, and Slopes

Same as for wet ponds (see BMP T9.10).

### Inlet and Outlet

The "Inlet and Outlet" criteria for wet ponds shall apply with the following modifications:

- A sump must be provided in the outlet structure of combined ponds.
- The detention flow restrictor and its outlet pipe shall be designed according to the requirements for detention ponds (see Volume III, Section 3.2.1).

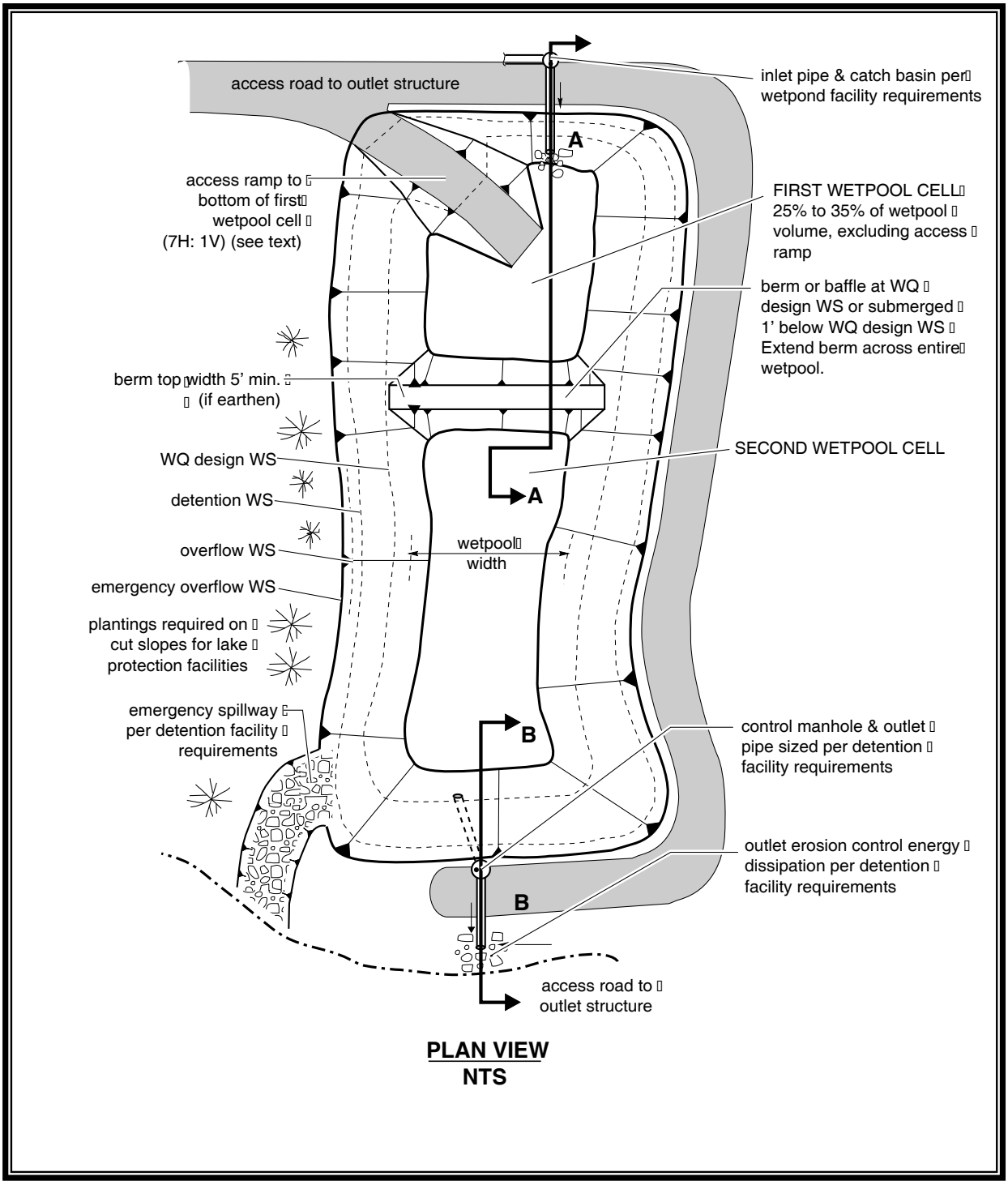


**Figure 9.4a. Combined Detention and Wet Pond.**

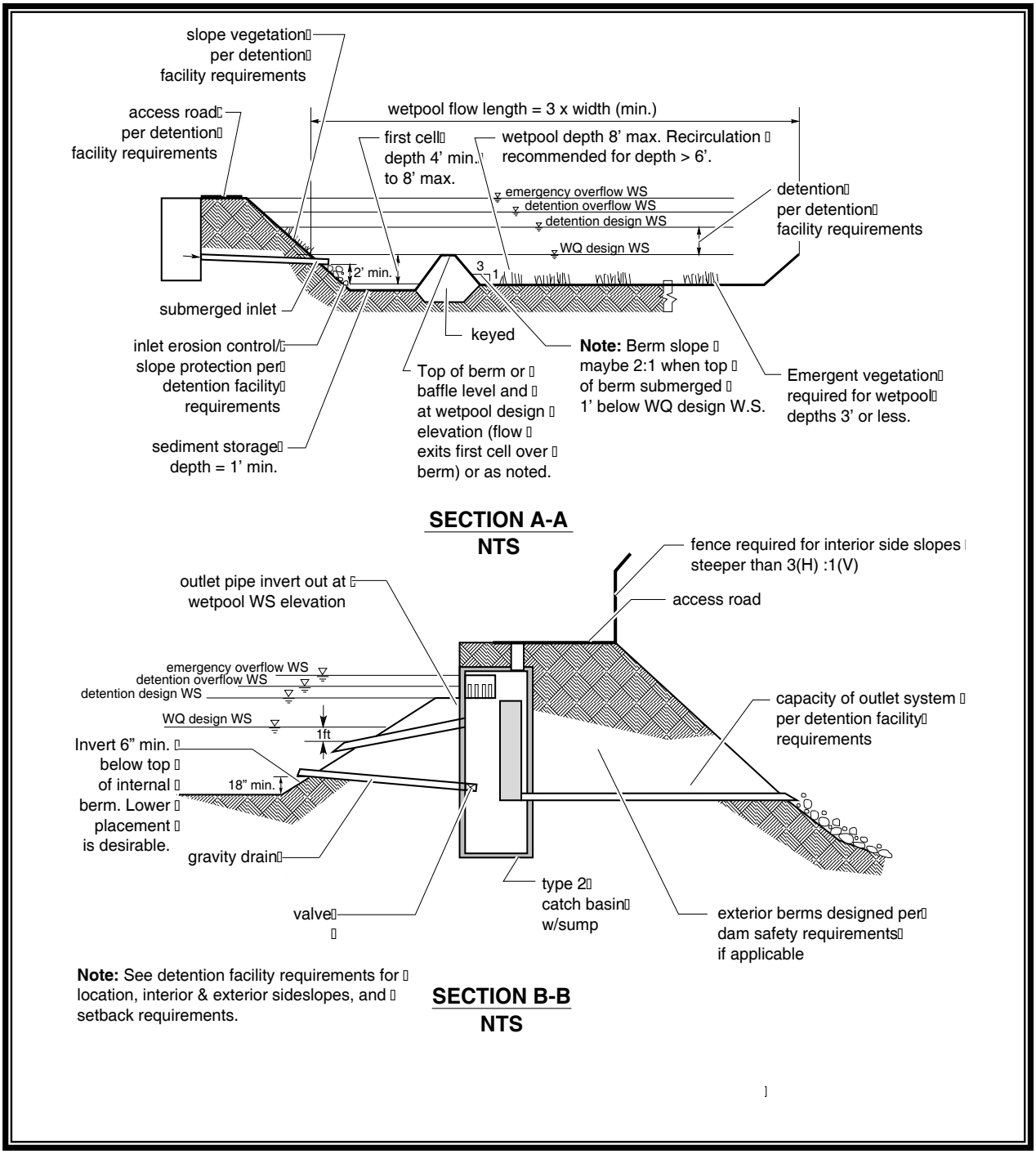


**Figure 9.4b. Combined Detention and Wet Pond (cont).**

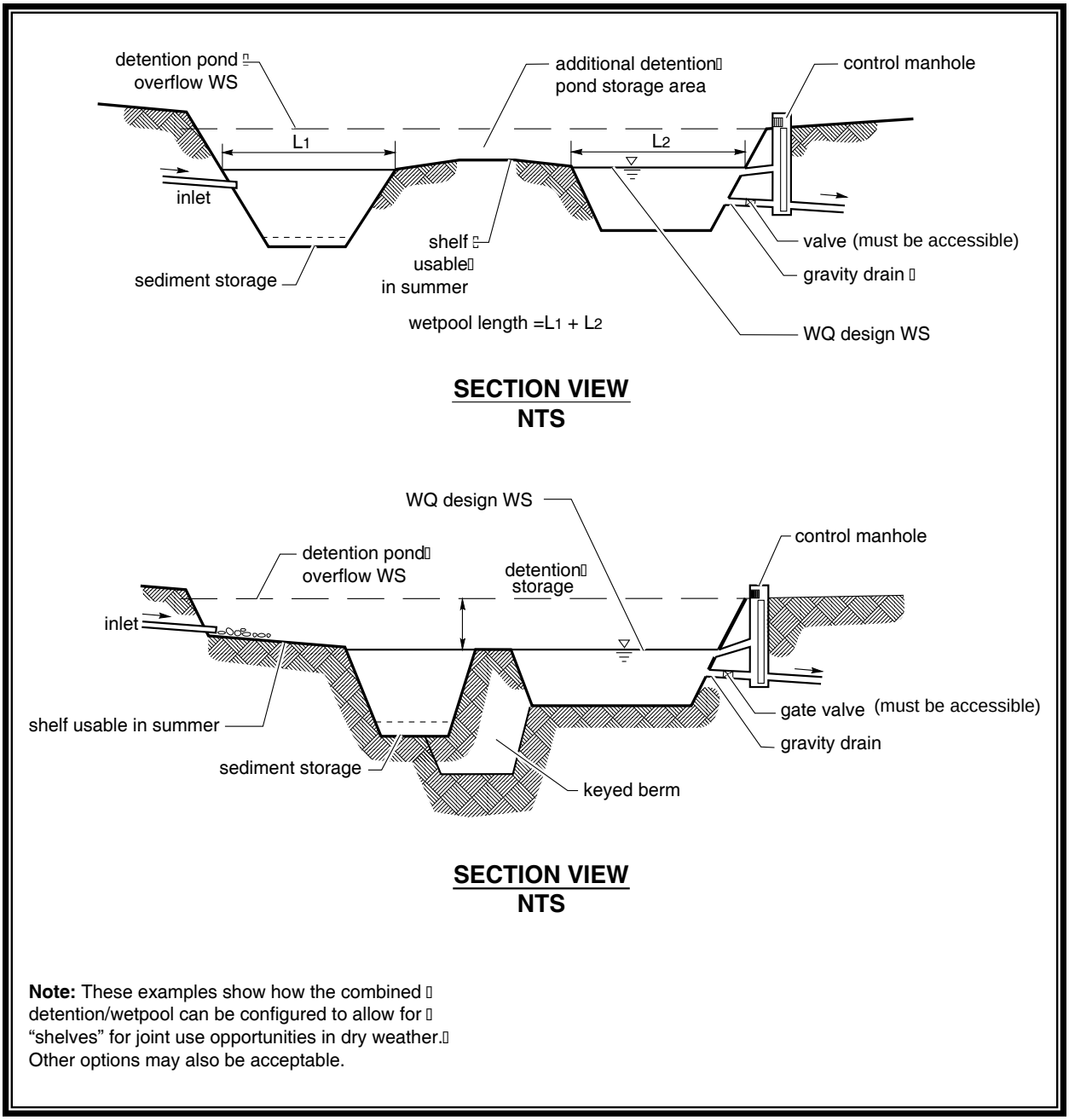


**Note:** These examples show how the combined detention/wetpool can be configured to allow for "shelves" for joint use opportunities in dry weather. Other options may also be acceptable.

**Figure 9.5. Alternative Configurations of Detention and Wet Pool Areas.**

### Access and Setbacks

Same as for wet ponds.

### Planting Requirements

Same as for wet ponds.

## *Combined Detention and Wet Vault*

### Sizing Procedure

The sizing procedure for combined detention and wet vaults is identical to those outlined for wet vaults and for detention facilities. The wet vault volume for a combined facility shall be equal to or greater than the 91st percentile, 24-hour runoff volume estimated by an approved continuous runoff model. Follow the standard procedure specified in Volume III to size the detention portion of the vault.

### Detention and Wet Vault Geometry

The design criteria for detention vaults and wet vaults must both be met, except for the following modifications:

The minimum sediment storage depth in the first cell shall average 1 foot. The 6 inches of sediment storage required for detention vaults does not need to be added to this, but 6 inches of sediment storage must be added to the second cell to comply with detention vault sediment storage requirements.

### Berms, Baffles, and Slopes

The design criteria for detention vaults and wet vaults must both be met, except for the following modifications:

The oil retaining baffle shall extend a minimum of 2 feet below the water quality design water surface.

> Intent: The greater depth of the baffle in relation to the water quality design water surface compensates for the greater water level fluctuations experienced in the combined vault.

*Note:* If a vault is used for detention as well as water quality control, the facility may not be modified to function as a baffle oil/water separator as allowed for wet vaults in BMP T9.20. This is because the added pool fluctuation in the combined vault does not allow for the quiescent conditions needed for oil separation.

### Inlet and Outlet

Same as for wet vaults.

### Access and Setbacks

Same as for wet vaults.

## *Combined Detention and Stormwater Wetland*

### Sizing Procedure

The sizing procedure for combined detention and stormwater wetlands is identical to those outlined for stormwater wetlands and for detention facilities. Follow the procedure specified in BMP T9.30 to determine the stormwater wetland size. Follow the standard procedure specified in Volume III to size the detention portion of the wetland.

### Detention and Wetland Geometry

The design criteria for detention ponds and stormwater wetlands must both be met, except for the following modifications:

- Water Level Fluctuation Restrictions: The difference between the water quality design water surface and the maximum water surface associated with the 2-year recurrence interval runoff shall not be greater than 3 feet. If this restriction cannot be met, the size of the stormwater wetland must be increased. The additional area may be placed in the first cell, second cell, or both. If placed in the second cell, the additional area need not be planted with wetland vegetation or counted in calculating the average depth.

  Intent: This criterion is designed to dampen the most extreme water level fluctuations expected in combined facilities to better ensure that fluctuation-tolerant wetland plants will be able to survive in the facility. It is not intended to protect native wetland plant communities and is not to be applied to natural wetlands.

- The "Wetland Geometry" criteria for stormwater wetlands (see BMP T9.30) must be modified such that the minimum sediment storage depth in the first cell is 1 foot. The 6 inches of sediment storage required for detention ponds does not need to be added to this, nor does the 6 inches of sediment storage in the second cell of detention pond.

  Intent: Since emergent plants are limited to shallower water depths, the deeper water created before sediments accumulate is considered detrimental to robust emergent growth.

Therefore, sediment storage is confined to the first cell which functions as a presettling cell.

The “Inlet and Outlet” criteria for wet ponds shall apply with the following modifications:

- A sump must be provided in the outlet structure of combined facilities.

- The detention flow restrictor and its outlet pipe shall be designed according to the requirements for detention ponds (see Volume III, Section 3.2.1).

  The “Planting Requirements” for stormwater wetlands are modified to use the following plants which are better adapted to water level fluctuations:

  - *Scirpus acutus* (hardstem bulrush) 2 - 6' depth
  - *Scirpus microcarpus* (small-fruited bulrush) 1 - 2.5' depth
  - *Sparganium emersum* (burreed) 1 - 2' depth
  - *Sparganium eurycarpum* (burreed) 1 - 2' depth
  - *Veronica* sp. (marsh speedwell) 0 - 1' depth

In addition, the shrub Spirea douglasii (*Douglas spirea*) may be used in combined facilities.

# Chapter 10 - Oil and Water Separators

This chapter provides a discussion of oil and water separators, including their application and design criteria. BMPs are described for baffle type and coalescing plate separators.

In addition to the oil and water separators outlined in this volume, Gig Harbor will also permit the use oil control booms for oil control when designed in accordance with the requirements outlined in the 2006 WSDOT Highway Runoff Manual, Chapter 5, BMP RT.22 (or subsequent updates as approved by Ecology and Gig Harbor).

## 10.1 Purpose of Oil and Water Separators

Remove oil and other water-insoluble hydrocarbons, and settleable solids from stormwater runoff.

## 10.2 Description

Oil and water separators are typically the API, also called baffle type (American Petroleum Institute, 1990) or the coalescing plate (CP) type using a gravity mechanism for separation. See Figures 10.1 and 10.2. Oil removal separators typically consist of three bays; forebay, separator section, and the afterbay. The CP separators need considerably less space for separation of the floating oil due to the shorter travel distances between parallel plates. A spill control separator (Figure 10.3) is a simple catch basin with a T-inlet for temporarily trapping small volumes of oil. The spill control separator is included here for comparison only and is not designed for, or to be used for treatment purposes.

## 10.3 Performance Objectives

Oil and water separators should be designed to remove oil and TPH down to 15 mg/L at any time and 10 mg/L on a 24-hour average, and produce a discharge that does not cause an ongoing or recurring visible sheen in the stormwater discharge or in the receiving water (see also Chapter 3).

Without intense maintenance, oil/water separators may not be sufficiently effective in achieving oil and TPH removal down to required levels. See Volume I, Minimum Requirement #10, and Appendix I-B for additional information on maintenance requirements.

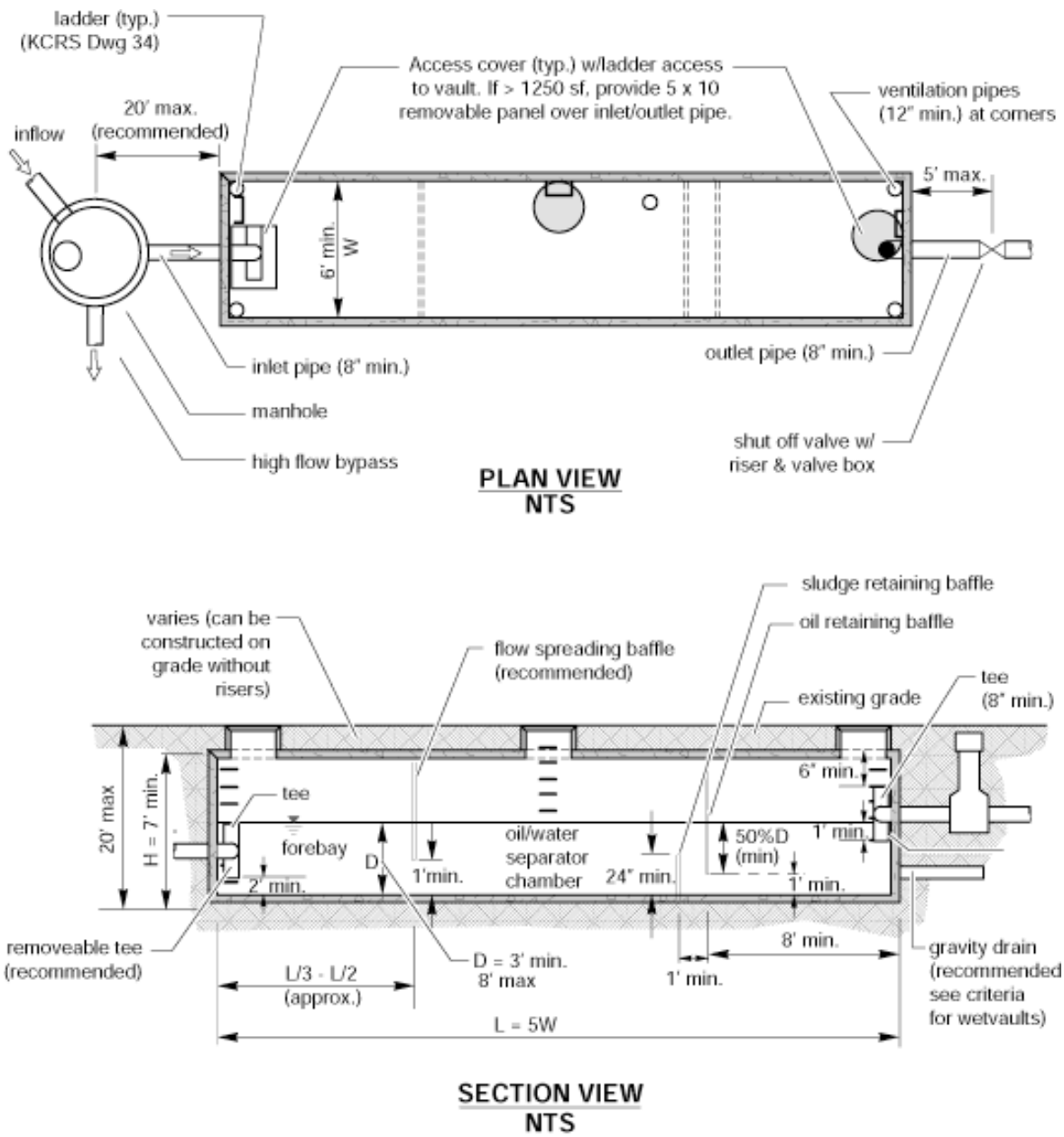


Source: King County (reproduced with permission)

**Figure 10.1. API (Baffle Type) Separator.**

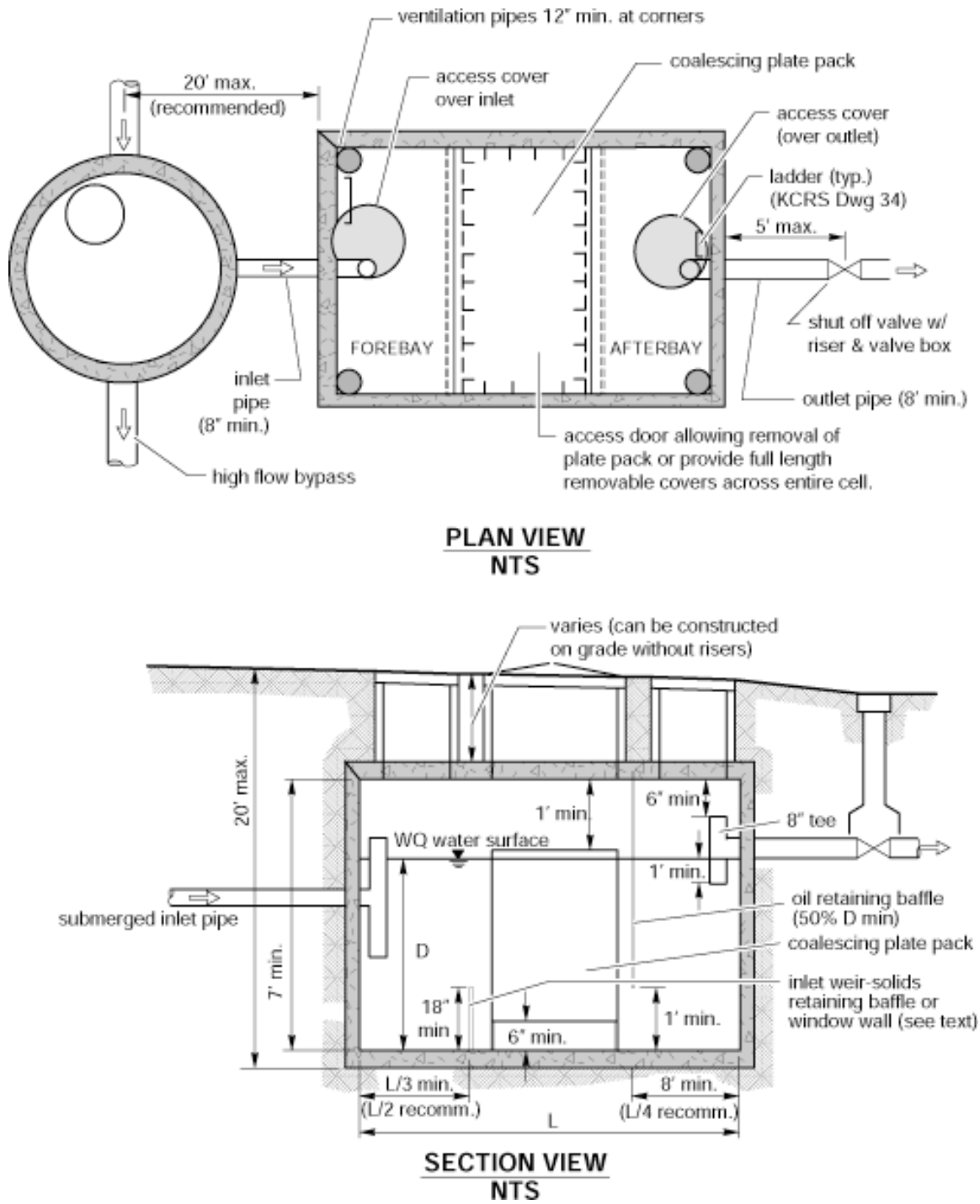


Source: King County (reproduced with permission)

**Figure 10.2. Coalescing Plate Separator.**

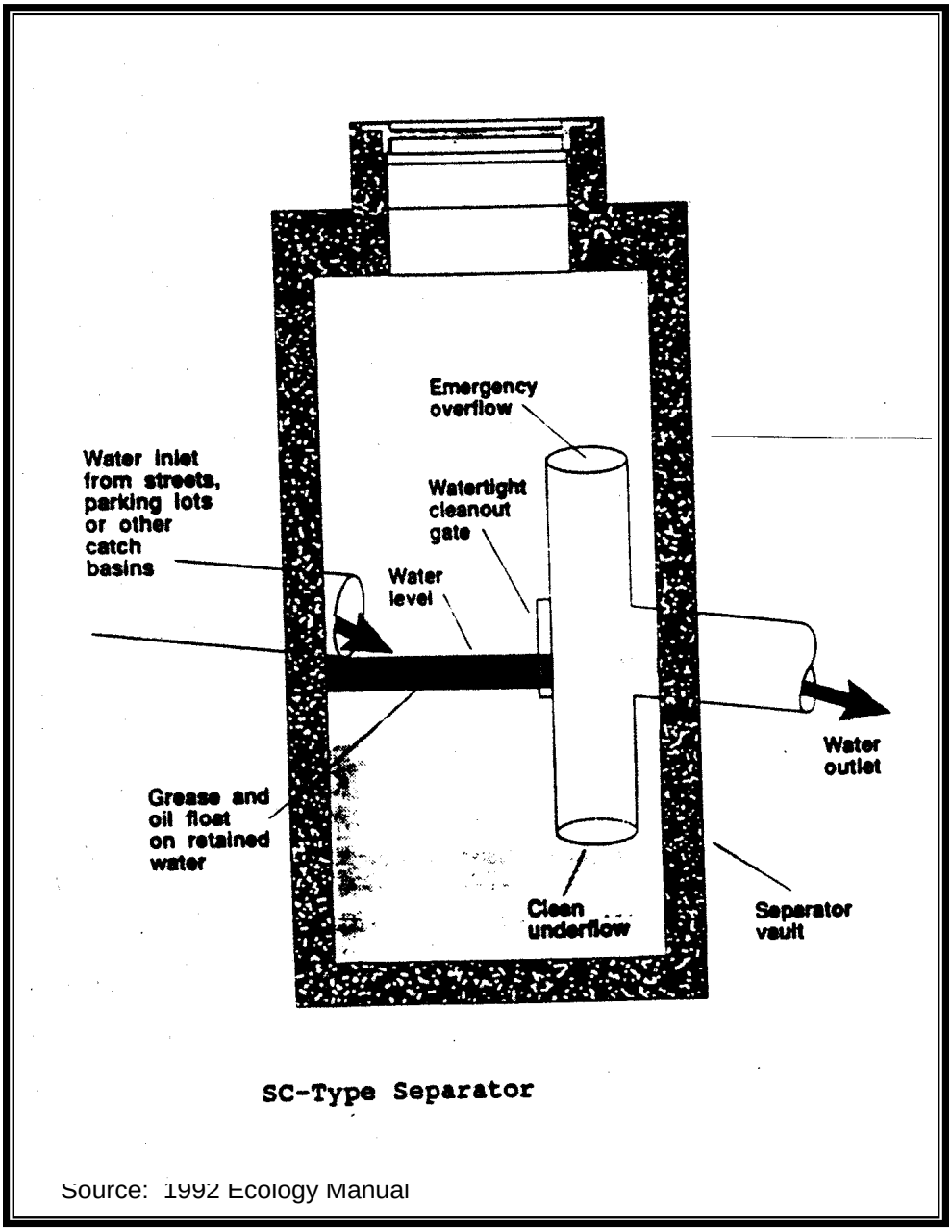


**Figure 10.3. Spill Control Separator (not for oil treatment).**

## 10.3 Site Suitability

Consider the following site characteristics:

- Sufficient land area
- Adequate total suspended solids control or pretreatment capability
- Compliance with environmental objectives
- Adequate influent flow attenuation and/or bypass capability
- Sufficient access for operation and maintenance (O&M).

## 10.4 Design Criteria-General Considerations

There is concern that oil/water separators used for stormwater treatment have not performed to expectations (Watershed Protection Techniques, 1994; Schueler, 1990). Therefore, emphasis should be given to proper application, design, O&M, (particularly sludge and oil removal) and prevention of CP fouling and plugging (U.S. Army Corps of Engineers, 1994). Other treatment systems, such as sand filters and emerging technologies, should be considered for the removal of insoluble oil and TPH.

The following are design criteria applicable to API and CP oil/water separators:

- Locate the separator off-line and bypass the incremental portion of flows that exceed the off-line 15-minute, Water Quality design flow rate multiplied by the ratio indicated in Figure 8.5b of this volume. If it is necessary to locate the separator on-line, try to minimize the size of the area needing oil control, and use the on-line water quality design flow rate multiplied by the ratio indicated in Figure 8.5a.
- Use only impervious conveyances for oil contaminated stormwater.
- Add pretreatment for total suspended solids that could cause clogging of the CP separator, or otherwise impair the long-term effectiveness of the separator.
- Include roughing screens for the forebay or upstream of the separator to remove debris. Screen openings should be about three-fourths inch.

### 10.4.1 Criteria for Separator Bays

- Size the separator bay for the Water Quality design flow rate (15-minute time step) x a correction factor ratio indicated in Figure 8.5b of this volume (assuming an off-line facility). (See Chapter 4 for a definition of the Water Quality Design Flow Rate.)

- To collect floatables and settleable solids, design the surface area of the forebay at ≥ 20 $ft^2$ per 10,000 $ft^2$ of area draining to the separator [(6)]. The length of the forebay should be one-third to one-half of the length of the entire separator.

- Include a submerged inlet pipe with a turn-down elbow in the first bay at least 2 feet from the bottom. The outlet pipe should be a Tee, sized to pass the design peak flow and placed at least 12 inches below the water surface.

- Include a shutoff valve at the separator outlet pipe.

### 10.4.2 Criteria for Baffles

- Oil retaining baffles (top baffles) should be located at least at one-fourth of the total separator length from the outlet and should extend down at least 50 percent of the water depth and at least 1 foot from the separator bottom.

- Baffle height to water depth ratios should be 0.85 for top baffles and 0.15 for bottom baffles.

## 10.5 Oil and Water Separator BMPs

Two BMPs are described in this section. BMP T10.10 for baffle type separators, and BMP T10.11 for coalescing plate separators.

## BMP T10.10 API (Baffle type) Separator Bay

API separators are designed for use on large sites greater than 2 acres. Ecology's 2005 Stormwater Management Manual for Western Washington (Ecology 2005) presents a design modification for using API separators in drainage areas smaller than 2 acres (e.g., fueling stations, commercial parking lots, etc.). However, Ecology also requires each developer to perform detailed performance verification during at least one wet season when using their modified design. Given this requirement, Gig Harbor has elected not to allow the use of API separators on sites smaller than 2 acres. The following approach only applies to contributing drainage areas larger than 2 acres.

### *Design Criteria*

The API design criteria is based on the horizontal velocity of the bulk fluid ($V_h$), the oil rise rate ($V_t$), the residence time ($t_m$), width, depth, and length considerations.

The following is the API sizing procedure:

- Determine the oil rise rate, $V_t$, in centimeters per second, using Stokes' Law (Water Pollution Control Federation, 1985) or empirical determination.

- Stokes Law equation for rise rate, $V_t$ (ft/min):

$$V_t = 1.97g(\sigma_w - \sigma_o)D^2 / 18\eta_w)$$

Where: 1.97 = conversion factor (centimeters per second/ft per minute)

g = gravitational constant (981 centimeters per second squared)

D = diameter of the oil particle (centimeters).

**Use**

oil particle size diameter, D = 60 microns (0.006 centimeters)

$\sigma_w$ = water density = 0.999 grams per cubic centimeter (gm/cc) at 32°F

$\sigma_o$: Select conservatively high oil density,

For example, if diesel oil @ $\sigma_o$=0.85 gm/cc and motor oil @ $\sigma_o$ = 0.90 gm/cc can be present then use $\sigma_o$=0.90 gm/cc

$\eta_w$ = dynamic viscosity of water = 0.017921 poise (gm/cm-sec). at water temperature of 32°F, (see API publication 421, February, 1990)

**For Stormwater Inflow from Drainages More Than 2 Acres**

- Determine $V_t$ based on above criteria

- Determine Q

  Q = the 15-minute Water Quality design flow rate in $ft^3$/min multiplied by the ratio indicated in Figure 8.5b for the site location (k). Note that WWHM gives the water quality design flow rate in $ft^3$/sec. Multiply this flow rate by 60 to obtain the flow rate in $ft^3$/min.

- Calculate horizontal velocity of the bulk fluid, $V_h$ (in ft/min), and depth (d), ft.

  $Vh = 15Vt$

  $d = (Q/2Vh)^{1/2}$ , with

  Separator water depth, $3 \leq d \leq 8$ feet (to minimize turbulence). If the calculated depth is less than 3 feet, an API separator is not appropriate for the site. If the calculated depth exceeds 8 feet, consider using two separators (American Petroleum Institute, 1990; U.S. Army Corps of Engineers, 1994).

- Calculate the minimum residence time ($t_m$), in minutes, of the separator at depth d:

  $t_m = d/V_t$

- Calculate the minimum length of the separator section, l(s), using:

  F = 1.65

  Depth/width (d/w) of 0.5 (American Petroleum Institute, 1990),

  $l(s) = FQt_m/wd = F(V_h/V_t)d$

  For other dimensions, including the length of the forebay, the length of the afterbay, and the overall length, L; refer to Figure 10.1.

- Calculate $V = l(s)wd = FQt_m$, and $A_h = wl(s)$

  V = minimum hydraulic design volume, in cubic feet.
  $A_h$ = minimum horizontal area of the separator, in square feet.

## BMP T10.11 Coalescing Plate (CP) Separator Bay

### *Design Criteria*

Calculate the projected (horizontal) surface area of plates needed using the following equation:

$A_p = Q/V_t = Q/0.00386(\sigma_w - \sigma_o/\eta_w)$

$A_p = A_a$(cosine b)

Where:

Q = k (the ratio appropriate for the project location) indicated by Figure 8.5b x the 15-minute water quality design flow rate, $ft^3$/min

$V_t$ = Rise rate of 0.033 ft/min, or empirical determination, or Stokes Law based

$A_p$ = projected surface area of the plate in $ft^2$; .00386 is unit conversion constant

$\sigma_w$=density of water at 32ºF

$\sigma_o$= density of oil at 32ºF

$A_a$ = actual plate area in $ft^2$ (one side only)

b = angle of the plates with the horizontal in degrees (usually varies from 45-60 degrees).

$\eta_w$=viscosity of water at 32ºF

- Plate spacing should be a minimum of three-fourths of an inch (perpendicular distance between plates) (WEF and ASCE, 1998; U.S. Army Corps of Engineers, 1994; US Air Force, 1991; Jaisinghani, R., 1979).
- Select a plate angle between 45° to 60° from the horizontal.
- Locate plate pack at least 6 inches from the bottom of the separator for sediment storage.
- Add 12 inches minimum head space from the top of the plate pack and the bottom of the vault cover.
- Design inlet flow distribution and baffles in the separator bay to minimize turbulence, short-circuiting, and channeling of the inflow especially through and around the plate packs of the CP separator. The Reynolds Number through the separator bay should be less than 500 (laminar flow).

- Include forebay for floatables and afterbay for collection of effluent (WEF and ASCE, 1998).
- The sediment-retaining baffle must be upstream of the plate pack at a minimum height of 18 inches.
- Design plates for ease of removal, and cleaning with high-pressure rinse or equivalent.

# Chapter 11 - Emerging Technologies

This chapter addresses emerging (new) technologies that have not been evaluated in sufficient detail to be acceptable for general usage in new development or redevelopment situations.

## 11.1 Background

As a Phase II NPDES stormwater permit holder, Gig Harbor is required to adopt the 2005 Washington State Department of Ecology Stormwater Management Manual for Western Washington or an equivalent manual. However, it has become clear that in some situations, the treatment BMPs described in Ecology's stormwater manual are either not applicable to certain unique site conditions, or that there are new methods to provide reliable and cost-effective removal of pollutants. This has generated a need to develop emerging stormwater treatment technologies in this state as well as nationwide.

Emerging technologies are new technologies that have not been evaluated using approved protocols, but for which preliminary data indicate that they may provide a desirable level of stormwater pollutant removal. Some emerging technologies have already been installed in Washington as parts of treatment trains or as stand-alone systems for specific applications. In some cases, emerging technologies are necessary to remove metals, hydrocarbons, and nutrients. Emerging technologies can also be used for retrofits and where land availability is unavailable for larger natural systems.

## 11.2 Evaluation of Emerging Technologies

Ecology currently participates in a process to evaluate emerging technologies for permanent and construction site stormwater runoff applications and to convey judgments made by local jurisdictions and others on their acceptance. Based on recommendations from Ecology's Stormwater Technical Advisory Committee (TAC), Ecology has implemented the following process:

- In order to properly evaluate new technologies, performance data must be obtained using the Ecology approved Technology Assessment Protocol-Ecology (TAPE) and the chemical TAPE (CTAPE) or other accepted protocols. These protocols can be downloaded at <http://www.ecy.wa.gov/programs/wq/stormwater/newtech/>. Other acceptable protocols may also be added to Ecology's Web site.

- Ecology participates in meetings of Technical Review Committee (TRC) and Chemical Technical Review Committee (CTRC), which will be asked to evaluate emerging technologies.

- Based on performance and other pertinent data from vendors and manufacturers and recommendations by the review committees, Ecology assesses levels of developments of emerging technologies and posts relevant decisions and supporting documentation at its stormwater Web site.

## 11.3 Applicability and Restrictions

Gig Harbor has chosen, in most instances, to include these new technologies in the Gig Harbor Stormwater Management and Site Development Manual when they reach the level of Conditional Use Designation (CUD) via the Technical Review Committee. The Gig Harbor Director of Public Works has the authority to add additional requirements or conditions to these technologies, beyond those required by Ecology. For technologies that have received CUD approval but are not included in this volume, project applicants must contact the City to determine whether the technology has also been approved by the City, and whether any additional requirements apply.

Additional general guidelines regarding the applicability and restrictions of emerging technologies are as follows:

- In most retrofit situations where the requirements of this Stormwater Management and Site Development Manual are not triggered, emerging BMPs may be used, with prior approval by the city. The assumption is that an experimental BMP is better than nothing.

- Emerging technologies may be used as a supplemental component of a treatment train, as long as the additional stormwater treatment facilities required by this manual will also be installed.

- All technologies receiving CUD designation and city approval will be required to sign a maintenance agreement with the city, stating that they will be responsible for maintaining these structures at all times, and filing annual reports as required in Volume I, Appendix I-B or as outlined for the specific CUD BMP by the city. This includes single family residential applications. In addition, all property owners using these technologies will be responsible for upgrade/replacement of their systems in perpetuity. This includes upgrading or replacing these systems when problems arise, standards change, or the technology is ultimately rejected by the Technical Review Committee or the city.

- Gig Harbor will generally allow pilot level applications of new technologies in order for manufacturers to obtain data to help fulfill the requirements of the testing protocol of the Technical Review Committee. These projects must be approved in advance by the Public Works Director, have an approved monitoring plan from the Technical Review Committee or Ecology, and provide a financial bond to provide cleanup and replacement in the event of failure.

# Volume V References and Information Sources


Allen, Tony (Recommendations by) -Geotechnical Engineer, WSDOT, 1999.

American Petroleum Institute, "Design and Operation of Oil-Water Separators," publication 421, Feb. 1990.

American Public Works Association (APWA) Task Committee, "Protocol for the Acceptance of Unapproved Stormwater Treatment Technologies for Use in the Puget Sound Watershed, November 1999.

Aquashield Inc., "Aquafilter Stormwater Filtration System", 2000.

ASCE and WEF, Urban Runoff Quality Management, WEF Manual of Practice No. 23, 1998.

Caraco, Deborah and Richard Claytor, Stormwater BMP Design Supplement for Cold Climates, Center for Watershed Protection, December 1997.

Center for Watershed Protection, "Better Site Design", August 1998.

Chang, George, C., "Review of Stormwater Manual-Sand Filtration Basins for Department of Ecology, State of Washington", November 5, 2000.

Chin, D.A., Water Resources Engineering, Prentice Hall, New Jersey, 2000.

Chow, V.T., "Open Channel Hydraulics", McGraw-Hill Book Co., New York, 1959.

City of Austin, Texas. Design Guidelines for Water Quality Control Basins, Environmental Criteria Manual, June 1988.

Claytor, Richard and Thomas Schueler, Design of Stormwater Filter Systems, December 1996.

Colwell, S.R., "Characterization of Performance Predictors and Evaluation of Mowing Practices in Biofiltration Swales." MSCE Thesis, U. of Washington, 2000.

Corbitt, Robert A., "Oil and Grease Removal," Handbook of Environmental Engineering, McGraw-Hill, Inc., 1990.

CSR-HydroConduit, "The Stormceptor System Technical Manual", 1997.

Ferguson, Bruce K., Stormwater Infiltration, Lewis Publishers, 1994.

Ferguson, Bruce K., Review of Draft Stormwater Manual for Western Washington (Infiltration Sections of Volume III and Volume V), October 2000.

Goldman, S.J., K. Jackson and T.A. Bursztynsky, "Erosion and Sediment Control Handbook" McGraw-Hill Book Co., New York, 1986.

H.I.L. Technology, Inc.," Downstream Defender", 1998.

Horner, R., "Fundamentals of Urban Runoff Management-Technical and Institutional Issues", 1994.

Horner, Richard "Review of Stormwater Manual." October 23, 2000.

Jaisinghani, R.A., et al., "A Study of Oil/Water Separation in Corrugated Plate Separators," Journal of Engineering for Industry, 11/79.

King County Surface Water Management, "High Use/Oil Control Decision Paper," Draft, 1994.

King County Surface Water Management, Design Manual, September, 1998.

King County Surface Water Management, WA, "Draft Guidelines for Full-Scale Infiltration Facility Testing", February, 2001.

Koon, John, "Evaluation of Water Quality Ponds and Swales in the Issaquah/East Sammamish Basins", King County Surface Water Management, 1995.

Koon, John, et al, "Evaluation of Commercial-Available Catch basin Inserts for the Treatment of Stormwater Runoff from Developed Sites", Interagency Catch basin Insert Committee, 1995.

Kulzer, Louise and Horner, Richard, et al., "Biofiltration Swale Performance, Recommendations, and Design Considerations", Municipality of Metropolitan Seattle. Publication 657, October 1992.

Lambert, C., "Stormceptor", CSR, Inc., July 2000.

Lee, D., T.A. Dillaha and J.H. Sherrard, "Modeling Phosphorus Transport in Grass Buffer Strips." Journal of Environmental Engineering, Volume 115, No. 2, New York, N.Y., April, 1989.

Leif, Bill, "Compost Stormwater Filter Evaluation", January 1999.

Leif, William, "Sediment Removal in Catch Basin Inserts", Snohomish County, March 1998.

Massmann, Joel and Carolyn Butchart, Infiltration Characteristics, Performance, and Design of Storm Water Facilities, U. of Washington, March 2000.

Mazer, Greg, "Environmental Limitations to Vegetation Establishment and Growth in Vegetated Stormwater Biofilters." University of Washington, July 1998.

Minton, Gary, "Planning Report No. 3: Sizing Oil/Water Separators for the Redmond Way Storm Drain System", Resource Planning Associates, 1990.

Minton, G., The Selection and Sizing of Treatment BMPs in New Developments to Achieve Water Quality Objectives, March 1993.

No. Carolina DEHNR," Stormwater Best Management Practices", November 1995.

Rawls, W.J., D.L. Brakensiek, and K.E. Saxton, Estimation of Soil Properties, Transactions of the American Society of Agricultural Engineers, Vol. 25, No. 5, pp. 1316-1320, 1982.

Schueler, Thomas R., "Water Quality inlets/Oil Grit Separators," BMP Fact Sheet 11, Current Assessment of Urban Best Management Practices, March 1992.

Schueler, Tom, et al., "A Current Assessment of Urban Best Management Practices", March 1992.

Seattle METRO, "Oil and Water Don't Mix," October 1990.

Shaver, Earl, Sand Filter Design for Water Quality Treatment, Delaware Department of Natural Resources and Environmental Control, 1992.

SPE Production Engineering, "Droplet-Settling vs. Retention-Time Theories for Sizing Oil/Water Separator," Kenneth Arnold, et al., February 1990.

Stenstrom, Michael, et al., "Oil and Grease in Urban Stormwater," 1983 paper for publication in Journal of Environ. Engineering.

Stormwater Management Co., "Stormfilter Product Manual", 1999.

Strynchuk, Justin, et al, "The Use of a CDS Unit for Sediment Control in Brevard County, April, 2000.

Sutherland, Roger, et al, "High Efficiency Sweeping as an Alternative to the Use of Wet Vaults for Stormwater Treatment," 1998.

Thurston County Environmental Health, "Oil/Water Separator Fact Sheet," circa 1995.

U.S. Air Force, “Gravity Oil and Water Separator Design Criteria,” circa 1991.

U.S. Army Corps of Engineers, “Selection and Design of Oil and Water Separators,” August 26, 1994.

U.S. Army Corps of Engineers, “Prefabricated Oil-Water Separators,” Draft Specifications, 1995.

U.S. Dept. of Commerce, Bureau of Public Roads, “Design Charts for Open-Channel Flow, Hydraulic Design Series 3”, Washington, D.C., 1961.

Urbonas, Ben, Hydraulic Design of Sand Filters for Stormwater Quality, 1997.

USEPA, “Stormwater BMP Design Supplement for Cold Climates”, December 1997.

Varner, Phyllis, et al, “Lakemont Stormwater Treatment Facility Monitoring Report,” City of Bellevue, November 1999.

Wang, T.S., D.E. Spyridakis, B.W. Mar, and R.R. Horner, “Transport, Deposition and Control of Heavy Metals in Highway Runoff.” FHWA-WA-RD-39.10. Report to Washington State Department of Transportation by Department of Civil Engineering, University of Washington, Seattle, 1982

Washington State Department of Ecology, “NPDES and State Waste Discharge General Permit for Stormwater Discharges Associated with Industrial Activities,” November 18, 1995.

Water Environment Federation, “Urban Runoff Quality Management”, American Society of Civil Engineers, 1998.

Water Pollution Control Federation, “Clarifier Design,” Manual of Practice FD-8, 1985.

Watershed Protection Techniques, “Hydrocarbon Hotspots in the Urban Landscape: Can They be Controlled?”, Feb. 1994.

WEF and ASCE, “Urban Runoff Quality Management, 1998.

Wiltsie, Edward, Stormwater Facilities Performance Study, Infiltration Pond Testing and Data Evaluation, August 10, 1998.

Woinsky, S. G., “New Advanced Solids/Oil/Water Separator,” Environmental Progress, Feb. 1995.

Wong, S.L. and R.H. McKuen, “The Design of Vegetative Buffer Strips for Runoff and Sediment Control”, Report to the Maryland

Coastal Zone Management Program, University of Maryland, College Park, Maryland, 1981.

Woodward-Clyde Consultants (Recommendations by), “Biofiltration Swales and Filter Strips”, November 1995.

Woodward-Clyde Consultants “Oil/Water Separators.”

Woodward-Clyde Consultants, Recommendations for Revising Ecology’s Manual, November 1995.

# Appendix V-A –
# Geotextile Specifications

# Appendix V-A – Geotextile Specifications

**Table A.1. Geotextile Properties for Underground Drainage Geotextile Property Requirements.[1]**

| | | Low Survivability | Moderate Survivability |
|---|---|---|---|
| **Geotextile Property** | **Test Method** | **Woven/Nonwoven** | **Woven/Nonwoven** |
| Grab Tensile Strength, min. in machine and x-machine direction | ASTM D4632 | 180 lbs/115 lbs min. | 250 lbs/160 lbs min. |
| Grab Failure Strain, in machine and x-machine direction | ASTM D4632 | <50 percent/>50 percent | <50 percent/>50 percent |
| Seam Breaking Strength (if seams are present) | ASTM D4632 | 160 lbs/100 lbs min. | 220 lbs/140 lbs min. |
| Puncture Resistance | ASTM D4833 | 67 lbs/40 lbs min. | 80 lbs/50 lbs min. |
| Tear Strength, min. in machine and x-machine direction | ASTM D4533 | 67 lbs/40 lbs min. | 80 lbs/50 lbs min. |
| Ultraviolet (UV) Radiation stability | ASTM D4355 | 50 percent strength retained min., after 500 hrs. in weatherometer | 50 percent strength retained min., after 500 hrs. in weatherometer |

[1] All geotextile properties are minimum average roll values (i.e., the test result for any sampled roll in a lot shall meet or exceed the values shown in the table).

**Table A.2. Geotextile for Underground Drainage Filtration Properties Geotextile Property Requirements.[1]**

| Geotextile Property | Test Method | Class A | Class B | Class C |
|---|---|---|---|---|
| AOS2 | ASTM D4751 | 0.43 mm max. (#40 sieve) | 0.25 mm max. (#60 sieve) | 0.18 mm max. (#80 sieve) |
| Water Permittivity | ASTM D4491 | 0.5 sec -1 min. | 0.4 sec -1 min. | 0.3 sec -1 min. |

[1] All geotextile properties are minimum average roll values (i.e., the test result for any sampled roll in a lot shall meet or exceed the values shown in the table).
[2] Apparent Opening Size (measure of diameter of the pores in the geotextile)

## Table A.3. Geotextile Strength Properties for Impermeable Liner Protection.

| Geotextile Property | Test Method | Geotextile Property Requirements1 |
|---|---|---|
| Grab Tensile Strength, min. in machine and x-machine direction | ASTM D4632 | 250 lbs min. |
| Grab Failure Strain, in machine and x-machine direction | ASTM D4632 | >50 percent |
| Seam Breaking Strength (if seams are present) | ASTM D4632 and ASTM D4884 (adapted for grab test) | 220 lbs min. |
| Puncture Resistance | ASTM D4833 | 125 lbs min. |
| Tear Strength, min. in machine and x-machine direction | ASTM D4533 | 90 lbs min. |
| Ultraviolet (UV) Radiation | ASTM D4355 | 50 percent strength stability retained min., after 500 hrs. in weatherometer |

[1] All geotextile properties are minimum average roll values (i.e., the test result for any sampled roll in a lot shall meet or exceed the values shown in the table).

### *Applications*

1. For sand filter drain strip between the sand and the drain rock or gravel layers specify Geotextile Properties for Underground Drainage, moderate survivability, Class A, from Tables A.1 and A.2 in the Geotextile Specifications.

2. For sand filter matting located immediately above the impermeable liner and below the drains, the function of the geotextile is to protect the impermeable liner by acting as a cushion. The specification provided below in Table A.3 should be used to specify survivability properties for the liner protection application. Table A.2, Class C should be used for filtration properties. Only nonwoven geotextiles are appropriate for the liner protection application.

3. For an infiltration drain specify Geotextile for Underground Drainage, low survivability, Class C, from Tables A.1 and A.2 in the Geotextile Specifications.

4. For a sand bed cover a geotextile fabric is placed exposed on top of the sand layer to trap debris brought in by the stormwater and to protect the sand, facilitating easy cleaning of the surface of the sand layer. However, a geotextile is not the best product for this application. A polyethylene or polypropylene geonet would be better. The geonet material should have high UV resistance (90 percent or more strength retained after 500 hours in the weatherometer, ASTM D4355), and high permittivity (ASTM D4491, 0.8 sec. -1 or more) and percent open area (CWO-22125, 10 percent or more). Tensile strength should be on the order of 200 lbs grab (ASTM D4632) or more.

Courtesy of Tony Allen, Geotechnical Engineer-WSDOT.

**Reference for Tables A.1 and A.2: Section 9-33.2 "Geotextile Properties," 2006 Standard Specifications for Road, Bridge, and Municipal Construction.**