DUMP NO WASTE

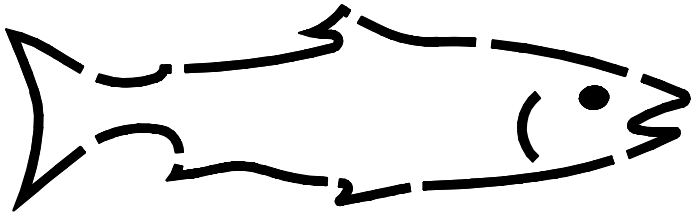

DRAINS TO STREAM

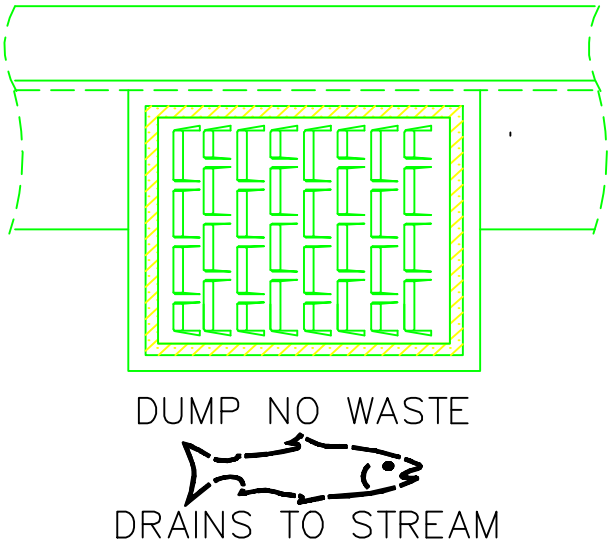

NOTES:

1. CENTER STENCIL 3" FROM ROADSIDE EDGE OF CATCH BASIN.
2. STENCIL LETTERING MUST BE 2" IN HEIGHT AND INSTALLED AS SHOWN ABOVE.
3. STENCIL LETTERING MUST BE WHITE.

CITY OF GIG HARBOR ENGINEERING DIVISION			
CATCH BASIN ANTI-DUMP MESSAGE			DWG. NO. **3-1**
APPROVED BY CITY ENGINEER		DATE 1/1/2014	
DWN ---	CKD ---	DATE 03-11-04	FILE (____)

File: 3-1.dwg Date: 20-Feb-09 11:50:43am

based on 5-1.1

REV. NO:

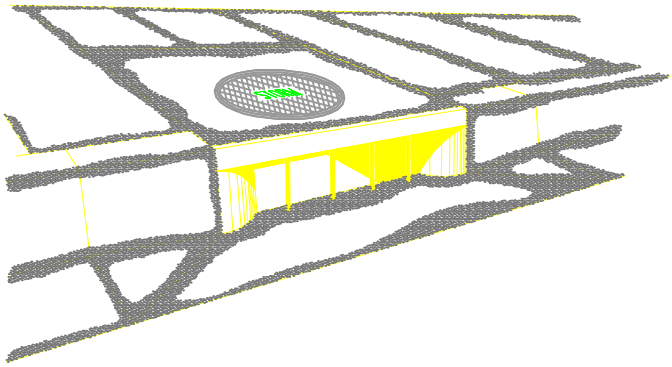

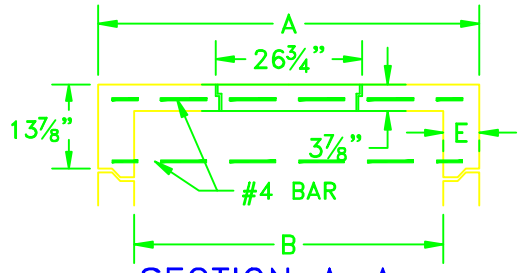

SECTION A–A

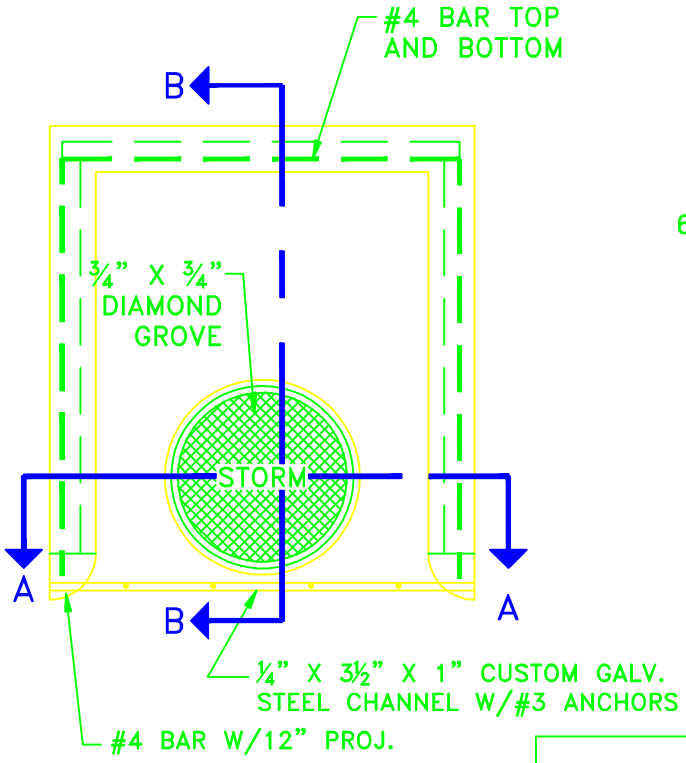

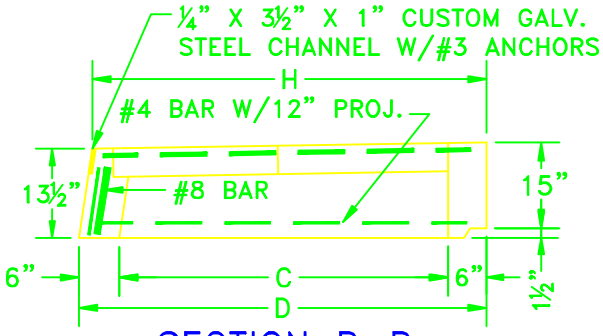

SECTION B–B

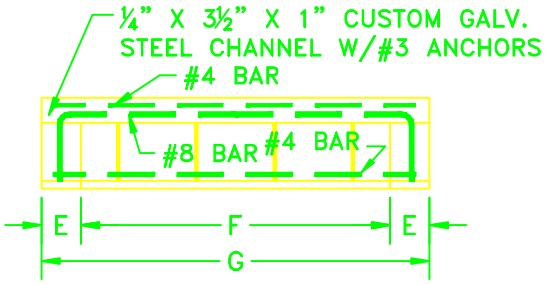

FRONT ELEVATION

DIMENSIONS IN INCHES									
CURB INLET	A	B	C	D	E	F	G	H	NO. OF ANCHORS
TYPE I	59	48	23¾	35¾	5½	48	59	34	4
TYPE II	59	48	55¾	67¾	5½	48	59	54	5
TYPE III	42	30	23	35	6	30	42	32¾	3

NOTES:

1. MANHOLE RING AND LOCKING COVER BY INLAND FOUNDARY" STORM".
2. ALL CONCRETE MINIMUM 3500 P.S.I. AT 28 DAYS.

CITY OF GIG HARBOR
ENGINEERING DIVISION

CURB INLET

DWG. NO. **3-2**

APPROVED BY CITY ENGINEER _____ DATE 1/1/2014

DWN	CKD	DATE	FILE
---	---	03-11-04	(____)

based on 3-2

REV. NO:

File: 3-2.dwg Date: 20-Feb-09 11:52:26am

K:\WTW\City Projects\Public works standards update\Sumitted\WS\3-2.dwg, 2/20/2009 11:52:22 AM, DWG To PDF.pc3

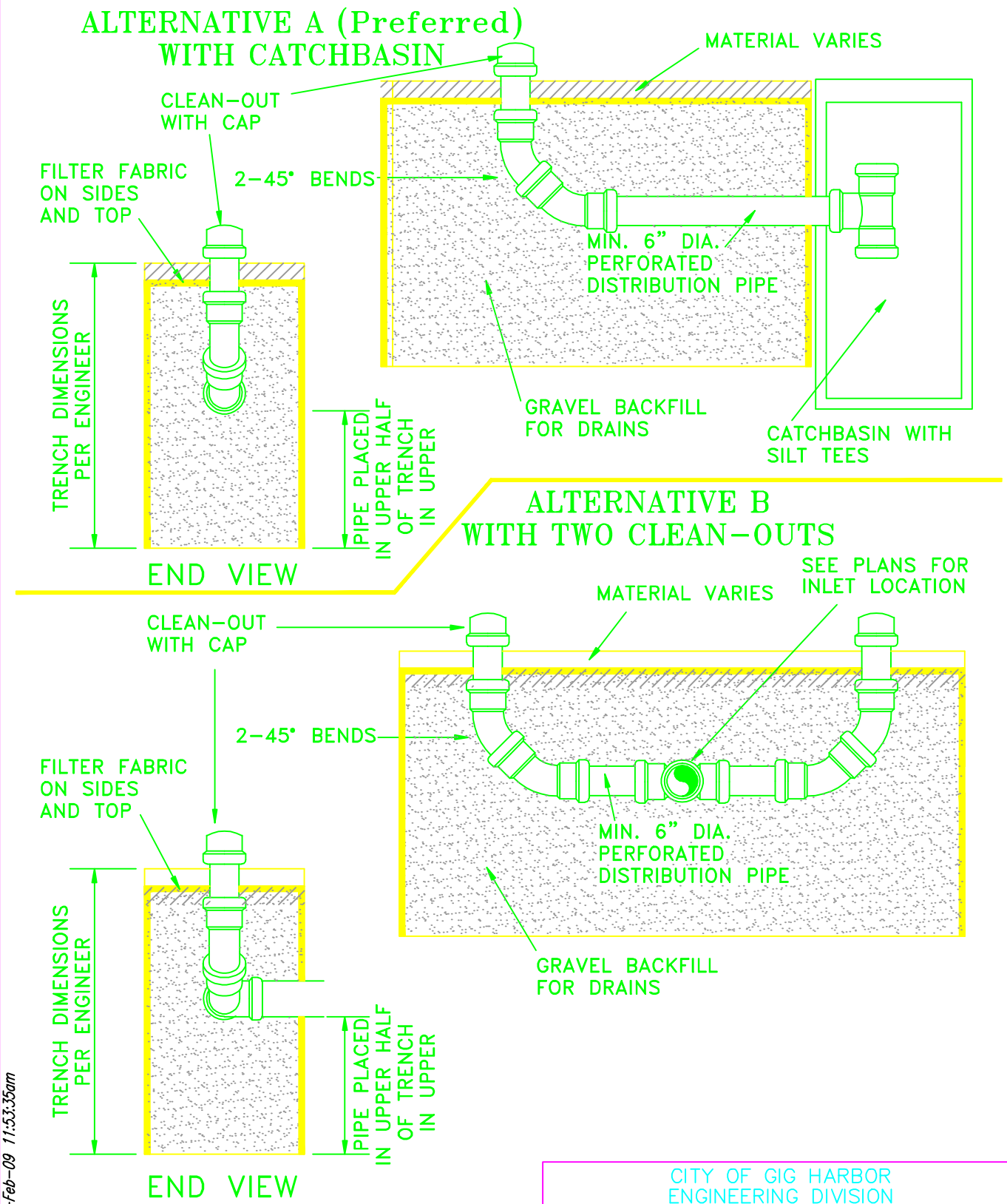

CITY OF GIG HARBOR
ENGINEERING DIVISION

INFILTRATION TRENCH

DWG. NO. **3-3**

APPROVED BY CITY ENGINEER _____ DATE 1/1/2014

DWN	CKD	DATE	FILE
---	---	03-11-04	(____)

File: 3-3.dwg Date: 20-Feb-09 11:53:35am

based on 5-7

REV. NO:

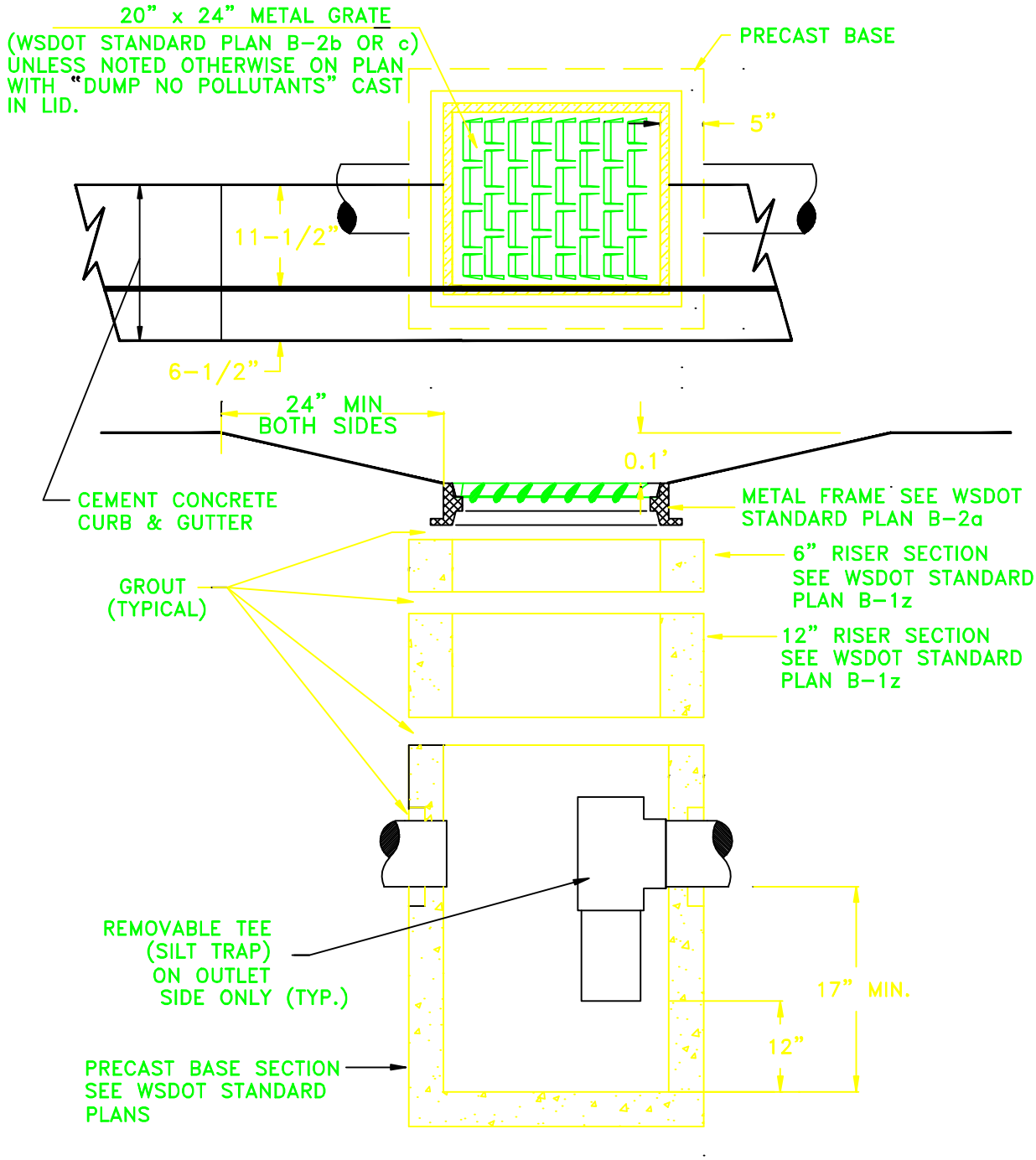

NOTE:

1. CATCH BASIN SHALL BE CONSTRUCTED IN ACCORDANCE WITH SPECIFICATIONS IN WSDOT STANDARD PLANS.
2. SEE DETAIL 3-5 FOR PAD REQUIREMENTS.
3. W.S.D.O.T. GRATE B-2C IS FOR BI-DIRECTIONAL FLOWS.
4. REMOVABLE SILT TRAP TEES TO BE INSTALLED IN ALL CATCH BASINS.

CITY OF GIG HARBOR
ENGINEERING DIVISION

SILT TRAP TEE AND DEPRESSION DETAIL FOR CATCH BASINS

DWG. NO. **3-4**

APPROVED BY CITY ENGINEER _____ DATE 1/1/2014

DWN	CKD	DATE	FILE
---	---	03-11-04	(____)

File: 3-4.dwg Date: 20-Feb-09 11:55:49am

based on xxx

REV. NO:

MANHOLE IN ASPHALT

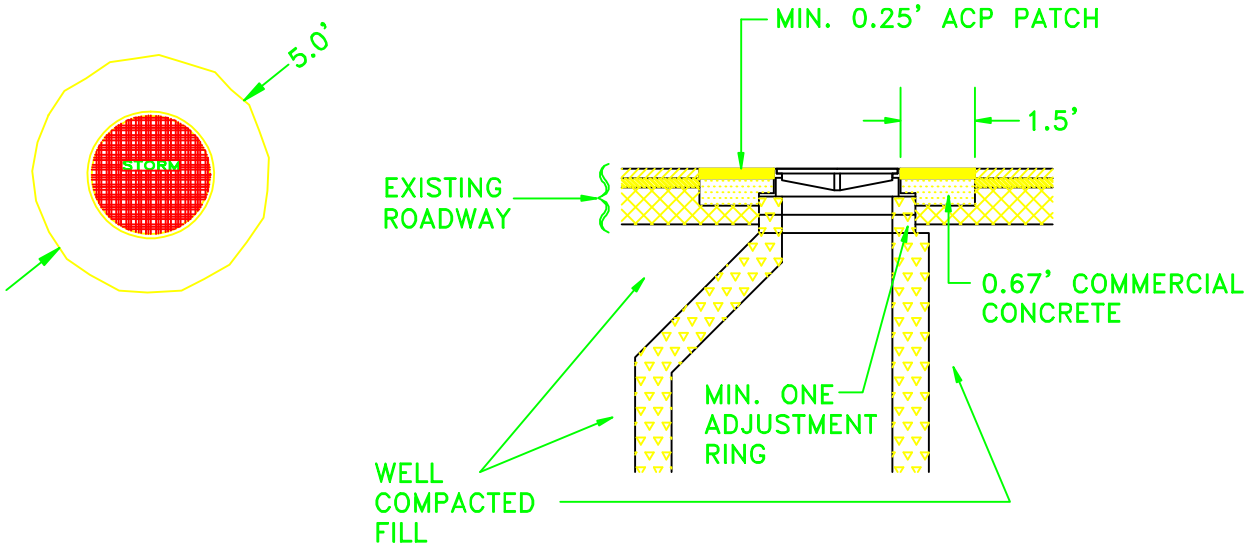

MANHOLE OUTSIDE ASPHALT

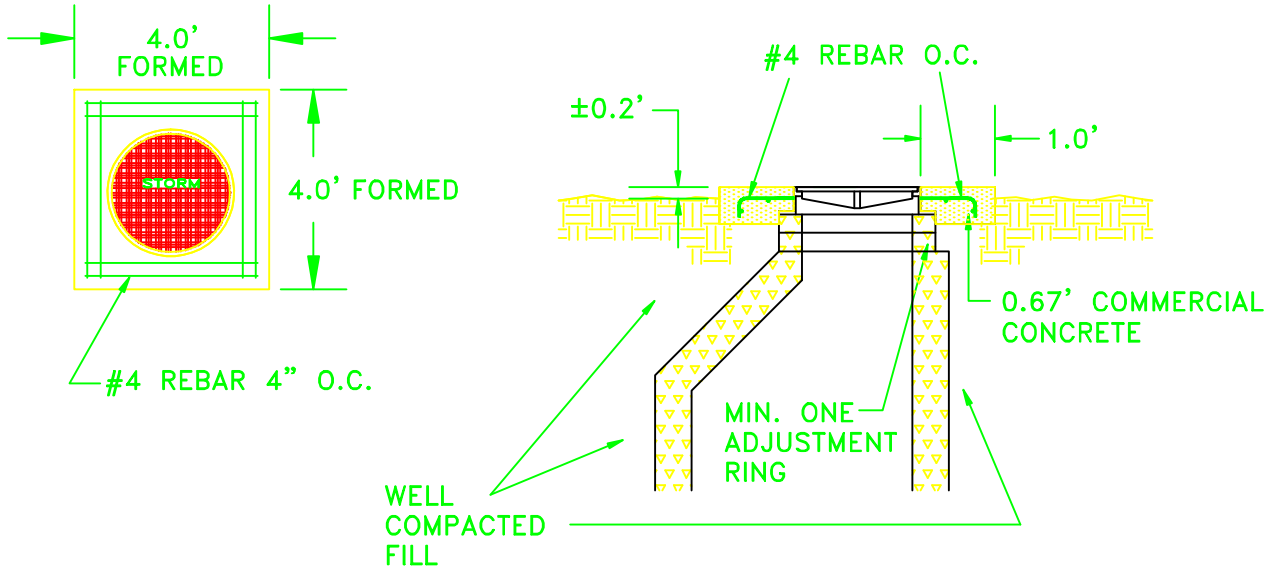

NOTE:

1. FOR STORM MANHOLE LOCATED OUTSIDE ASPHALT, ADD REINFORCING STEEL AND CONCRETE PAD AS SHOWN ABOVE. DEFORMED BAR TO MEET ASTM A615 GRADE 60 FY=60,000 P.S.I.

CITY OF GIG HARBOR ENGINEERING DIVISION			
STORM MANHOLE COLLAR			DWG. NO. 3-5
APPROVED BY CITY ENGINEER		DATE 1/1/2014	
DWN ---	CKD ---	DATE 03-11-04	FILE (____)

File: 3-5.dwg Date: 20-Feb-09 11:57:02am

based on 5-5

REV. NO: